GradeMax

* 0000800000001 * DFD

Cambridge Assessment International Education

Cambridge IGCSE™

CANDIDATE NAME

CENTRE NUMBER | | | | | |

CANDIDATE NUMBER | | | | |

2212652509

PHYSICS **0625/51**

Paper 5 Practical Test **October/November 2025**

1 hour 15 minutes

You must answer on the question paper.

You will need: The materials and apparatus listed in the confidential instructions

INSTRUCTIONS

- Answer **all** questions.
- Use a black or dark blue pen. You may use an HB pencil for any diagrams or graphs.
- Write your name, centre number and candidate number in the boxes at the top of the page.
- Write your answer to each question in the space provided.
- Do **not** use an erasable pen or correction fluid.
- Do **not** write on any bar codes.
- You may use a calculator.
- You should show all your working and use appropriate units.

INFORMATION

- The total mark for this paper is 40.
- The number of marks for each question or part question is shown in brackets [ ].

For Examiner's Use	
1	
2	
3	
4	
Total	

This document has **12** pages. Any blank pages are indicated.

DC (PB/FC) 345628/2
© UCLES 2025

[Turn over

GradeMax

1 In this experiment, you will investigate the balancing of a metre ruler.

Refer to Fig. 1.1.

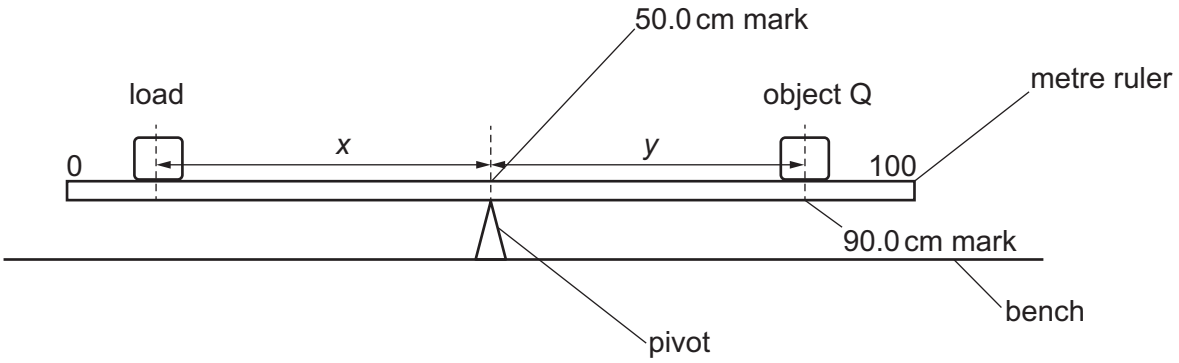

Fig. 1.1

(a) • Place the metre ruler on the pivot at the 50.0 cm mark.
• Place the object Q with its centre on the metre ruler at the 90.0 cm mark.

Determine the distance *y* from the 50.0 cm mark to the centre of the object Q.

y = ... cm [2]

(b) • Place the 2.0 N load on the metre ruler.
• Adjust the position of the load so that the metre ruler is as near as possible to being balanced.

(i) Determine the distance *x* from the centre of the load to the 50.0 cm mark.

x = ... cm [1]

(ii) Calculate the weight *W* of object Q, using the equation $W = \frac{x}{y} \times 2.0\,\text{N}$.
Give your answer to a suitable number of significant figures for this experiment.

W = ... N [2]

(c) Remove the 2.0 N load from the metre ruler. Do **not** change the position of object Q.

Repeat the steps above, using the 3.0 N load and the equation $W = \frac{x}{y} \times 3.0\,\text{N}$.

y = ... cm

x = ... cm

W = ... N [2]

DO NOT WRITE IN THIS MARGIN
DO NOT WRITE IN THIS MARGIN
DO NOT WRITE IN THIS MARGIN
DO NOT WRITE IN THIS MARGIN
DO NOT WRITE IN THIS MARGIN

(d) State and explain whether your two values of *W* are equal within the limits of experimental accuracy. Refer to the values of *W* in your answer.

statement .....

explanation .....

.....

.....

[2]

(e) Explain how you ensure that the centre of object Q is directly over the 90.0 cm mark of the metre ruler. You may draw a diagram.

.....

.....

.....

..... [1]

(f) It is difficult to find the position of the load to obtain the exact balance of the metre ruler.

Explain how you try to overcome this difficulty.

.....

.....

..... [1]

[Total: 11]

DO NOT WRITE IN THIS MARGIN
DO NOT WRITE IN THIS MARGIN
DO NOT WRITE IN THIS MARGIN
DO NOT WRITE IN THIS MARGIN
DO NOT WRITE IN THIS MARGIN

GradeMax

2 In this experiment, you will investigate the resistance of a wire.

Refer to Fig. 2.1. The circuit has been set up for you.

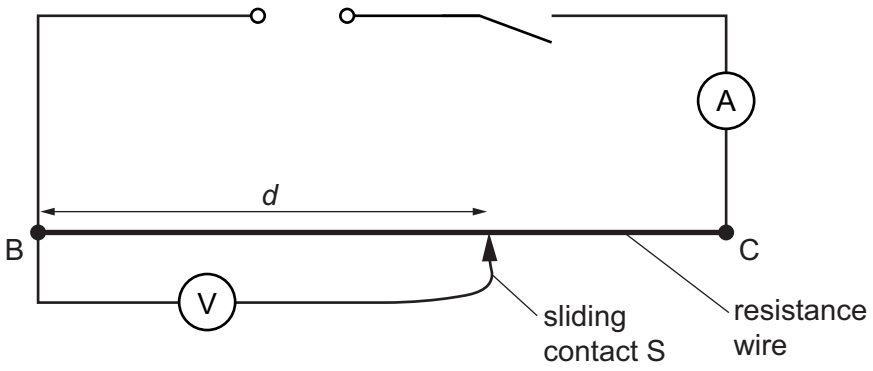

Fig. 2.1

(a) Close the switch.

Measure the current I in the circuit. Include the unit.

I = ... [1]

(b) Place the sliding contact on the resistance wire at a distance of 20.0 cm from B.

Measure the potential difference (p.d.) V across the length d = 20.0 cm of resistance wire BC.

(i) Record the values of d and V in Table 2.1. [1]

Open the switch.

(ii) Calculate the resistance R of 20.0 cm of the resistance wire, using the equation

$$R = \frac{V}{I}.$$

Record R in Table 2.1. [1]

(iii) Complete the column headings in Table 2.1. [1]

Table 2.1

DO NOT WRITE IN THIS MARGIN
DO NOT WRITE IN THIS MARGIN
DO NOT WRITE IN THIS MARGIN
DO NOT WRITE IN THIS MARGIN
DO NOT WRITE IN THIS MARGIN

(c) Close the switch.

Repeat the procedure in **(b)(i)** and **(b)(ii)** using values of $d = 40.0\,\text{cm}$, $d = 60.0\,\text{cm}$, $d = 80.0\,\text{cm}$ and $d = 100.0\,\text{cm}$. [3]

(d) Plot a graph of resistance R/Ω (y-axis) against length d/cm (x-axis). Draw a best-fit line.

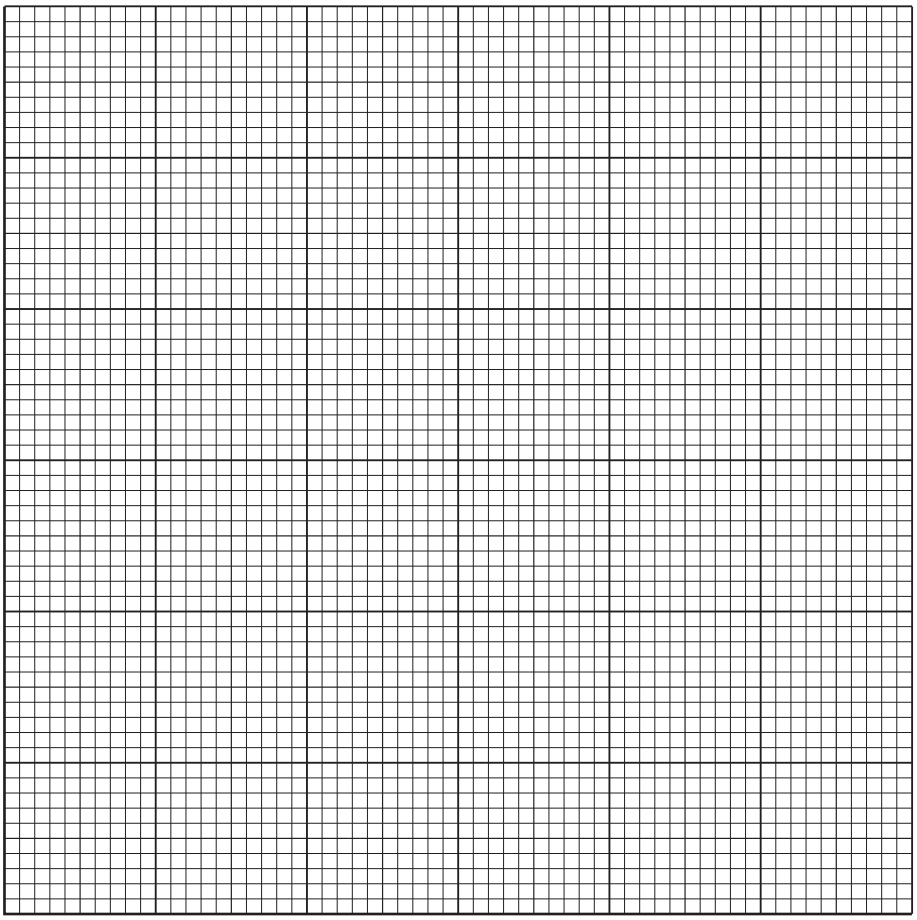

[4]

[Total: 11]

DO NOT WRITE IN THIS MARGIN
DO NOT WRITE IN THIS MARGIN
DO NOT WRITE IN THIS MARGIN
DO NOT WRITE IN THIS MARGIN
DO NOT WRITE IN THIS MARGIN

GradeMax

3 In this experiment, you will investigate the refraction of light in the material of a transparent block.

Use the separate ray-trace sheet provided. You may refer to Fig. 3.1 for guidance.

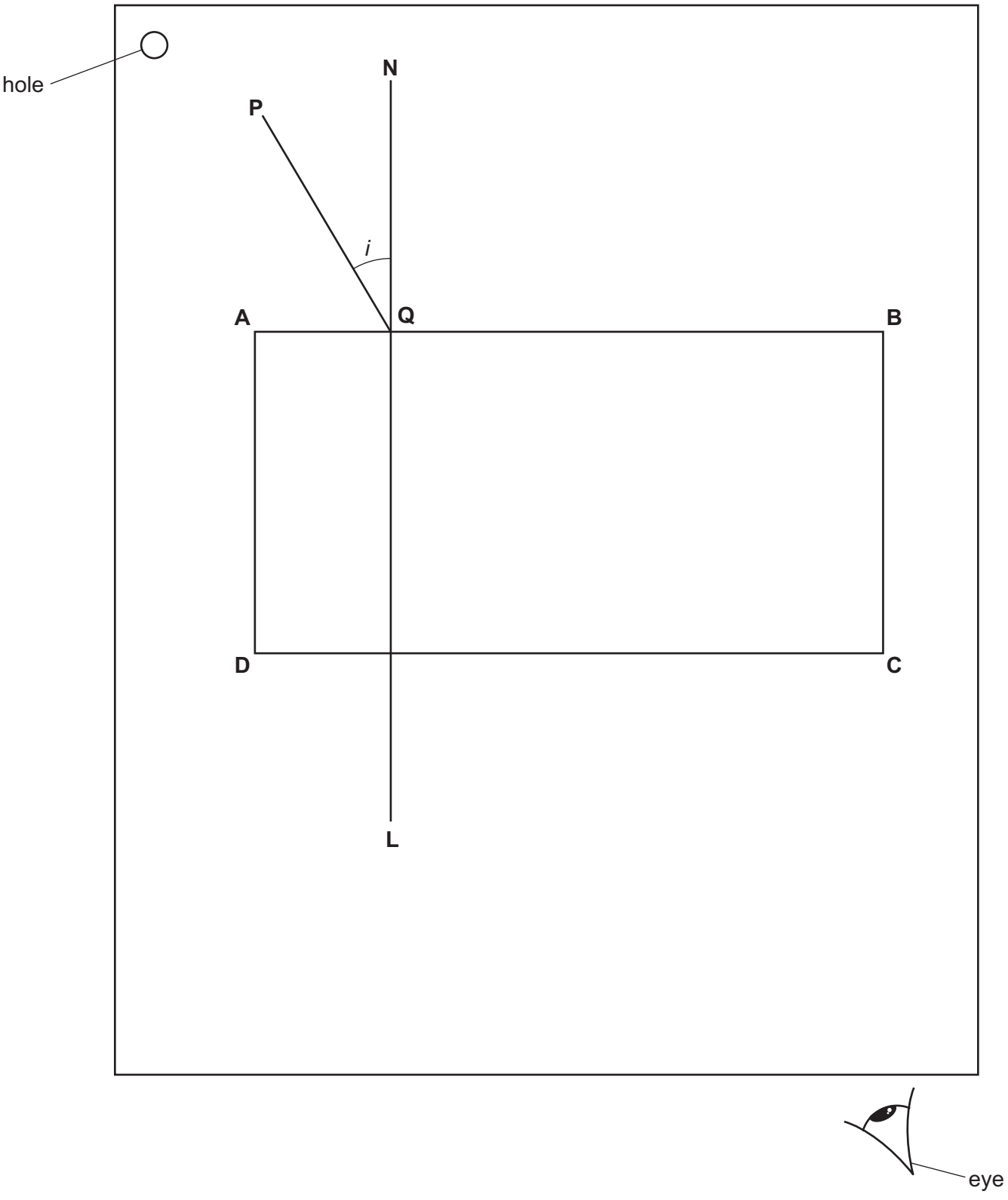

Fig. 3.1

DO NOT WRITE IN THIS MARGIN
DO NOT WRITE IN THIS MARGIN
DO NOT WRITE IN THIS MARGIN
DO NOT WRITE IN THIS MARGIN
DO NOT WRITE IN THIS MARGIN

GradeMax

(a)
- Place the transparent block, largest face down, on the ray-trace sheet supplied. The block should be approximately in the middle of the paper.
- Draw and label the outline of the block **ABCD**.
- Remove the block and draw the normal **NL** to the side **AB** at a distance 2.0 cm from **A**. Continue the normal so that it passes through side **CD** of the block.
- Label the point **Q** where **NL** crosses **AB**.

[2]

(b)
- Draw the line **PQ** at an angle $i = 30°$ to the normal as shown in Fig. 3.1.
- Place the paper on the pin board.
- Place two pins P_1 and P_2 on line **PQ** at a suitable distance apart for this experiment.
- Replace the block and look from the position of the eye shown in Fig. 3.1, to observe the images of P_1 and P_2 through side **CD** of the block. Adjust your line of sight until the images of P_1 and P_2 appear exactly one behind the other.
- Place two pins P_3 and P_4 (at a suitable distance apart) between side **CD** of the block and your eye so that P_3, P_4 and the images of P_1 and P_2 seen through the block appear exactly one behind the other.
- Label the positions of P_1, P_2, P_3 and P_4.
- Remove the pins.

[3]

(c)
- Draw a line through the positions of P_3 and P_4. Continue the line until it meets **NL** and label that point **E**.
- Label the other end of this line **F**.
- Measure the acute angle θ between **EF** and the normal. An acute angle is an angle less than 90°.

angle θ = …….. [2]

(d) Repeat the procedure in **(b)** and **(c)** using an angle of incidence $i = 45°$ to obtain a new value of angle θ.

angle θ = …….. [1]

(e) Tick **one** box to complete the sentence.

To produce the most accurate ray-trace, a student places the pins P_1 and P_2

- ☐ exactly 5.0 cm apart.
- ☐ less than 5.0 cm apart.
- ☐ more than 5.0 cm apart.

[1]

DO NOT WRITE IN THIS MARGIN
DO NOT WRITE IN THIS MARGIN
DO NOT WRITE IN THIS MARGIN
DO NOT WRITE IN THIS MARGIN
DO NOT WRITE IN THIS MARGIN

GradeMax

(f) A student plans to investigate the relationship between angle *i* and angle θ. The student takes more sets of readings to test the relationship. List suitable values of angle *i* that the student can use.

.....

..... [2]

Write your name, centre number and candidate number on your ray-trace sheet.

Tie your ray-trace sheet into this Question Booklet between pages 6 and 7.

[Total: 11]

DO NOT WRITE IN THIS MARGIN
DO NOT WRITE IN THIS MARGIN
DO NOT WRITE IN THIS MARGIN
DO NOT WRITE IN THIS MARGIN
DO NOT WRITE IN THIS MARGIN

GradeMax

BLANK PAGE

DO NOT WRITE IN THIS MARGIN
DO NOT WRITE IN THIS MARGIN
DO NOT WRITE IN THIS MARGIN
DO NOT WRITE IN THIS MARGIN
DO NOT WRITE IN THIS MARGIN

GradeMax

4 A student is investigating electrical heaters that are used in the school laboratory to heat beakers of water. The heaters are all 12 V heaters with the same power rating. The student thinks that some heaters are more efficient than other heaters.

Plan an experiment to compare how quickly the heaters increase the temperature of water to boiling point.

You are **not** required to do this experiment.

The following apparatus is available to the student:

- five electrical heaters
- beakers
- supply of water
- 12 V power supply with suitable leads.

Other apparatus normally available in a school laboratory can also be used.

In your plan:

- list any additional apparatus required
- explain briefly how you do the investigation, including the measurements you take
- state the key variables to be kept constant
- draw a suitable table, with column headings, to show how to display your readings (you are **not** required to enter any readings in the table)
- explain how you use the results to reach a conclusion.

DO NOT WRITE IN THIS MARGIN
DO NOT WRITE IN THIS MARGIN
DO NOT WRITE IN THIS MARGIN
DO NOT WRITE IN THIS MARGIN
DO NOT WRITE IN THIS MARGIN

GradeMax

DO NOT WRITE IN THIS MARGIN
DO NOT WRITE IN THIS MARGIN
DO NOT WRITE IN THIS MARGIN
DO NOT WRITE IN THIS MARGIN
DO NOT WRITE IN THIS MARGIN

.....

.....

.....

GradeMax

BLANK PAGE

DO NOT WRITE IN THIS MARGIN
DO NOT WRITE IN THIS MARGIN
DO NOT WRITE IN THIS MARGIN
DO NOT WRITE IN THIS MARGIN
DO NOT WRITE IN THIS MARGIN

Permission to reproduce items where third-party owned material protected by copyright is included has been sought and cleared where possible. Every reasonable effort has been made by the publisher (UCLES) to trace copyright holders, but if any items requiring clearance have unwittingly been included, the publisher will be pleased to make amends at the earliest possible opportunity.

To avoid the issue of disclosure of answer-related information to candidates, all copyright acknowledgements are reproduced online in the Cambridge Assessment International Education Copyright Acknowledgements Booklet. This is produced for each series of examinations and is freely available to download at www.cambridgeinternational.org after the live examination series.

Cambridge Assessment International Education is part of Cambridge Assessment. Cambridge Assessment is the brand name of the University of Cambridge Local Examinations Syndicate (UCLES), which is a department of the University of Cambridge.

© UCLES 2025