GradeMax

CAMBRIDGE
International Education

Cambridge IGCSE™

PHYSICS **0625/12**

Paper 1 Multiple Choice (Core) **February/March 2026**

45 minutes

You must answer on the multiple choice answer sheet.

You will need: Multiple choice answer sheet
Soft clean eraser
Soft pencil (type B or HB is recommended)

INSTRUCTIONS

- There are **forty** questions on this paper. Answer **all** questions.
- For each question there are four possible answers **A**, **B**, **C** and **D**. Choose the **one** you consider correct and record your choice in soft pencil on the multiple choice answer sheet.
- Follow the instructions on the multiple choice answer sheet.
- Write in soft pencil.
- Write your name, centre number and candidate number on the multiple choice answer sheet in the spaces provided unless this has been done for you.
- Do **not** use correction fluid or tape.
- Do **not** write on any bar codes.
- You may use a calculator.
- Take the weight of 1.0 kg to be 9.8 N (acceleration of free fall = 9.8 m / s^2).

INFORMATION

- The total mark for this paper is 40.
- Each correct answer will score one mark.
- Any rough working should be done on this question paper.

This document has **16** pages. Any blank pages are indicated.

© Cambridge University Press & Assessment 2026
[Turn over

1 Water drips from a tap into a measuring cylinder.

The table shows the volume of water in the cylinder every minute for four minutes.

time / minutes	volume of water / cm^3
0	0
1.0	27
2.0	57
3.0	83
4.0	112

What is the average volume of water collected in the cylinder each minute?

A 22 cm^3 **B** 28 cm^3 **C** 56 cm^3 **D** 57 cm^3

2 The graph shows how the speed of an object changes with time.

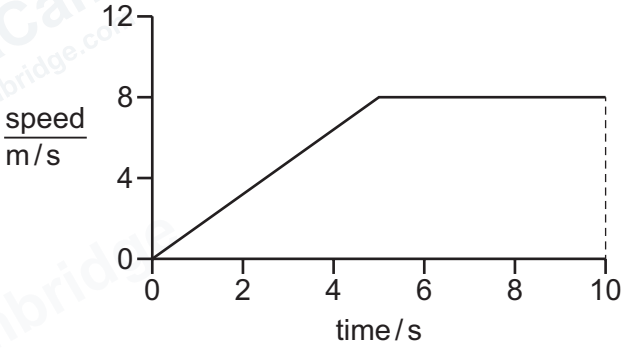

How far does the object travel in 10 seconds?

A 8 m **B** 10 m **C** 60 m **D** 80 m

3 Which expression can be used to determine the acceleration of free fall of an object?

A $\frac{F}{A}$ **B** Pt **C** vt **D** $\frac{W}{m}$

4 What is **not** a possible unit of density?

A g / mm^3 **B** kg / dm^3 **C** N / m^3 **D** g / km^3

© Cambridge University Press & Assessment 2026

GradeMax

5 The diagram shows an extension–load graph for a spring.

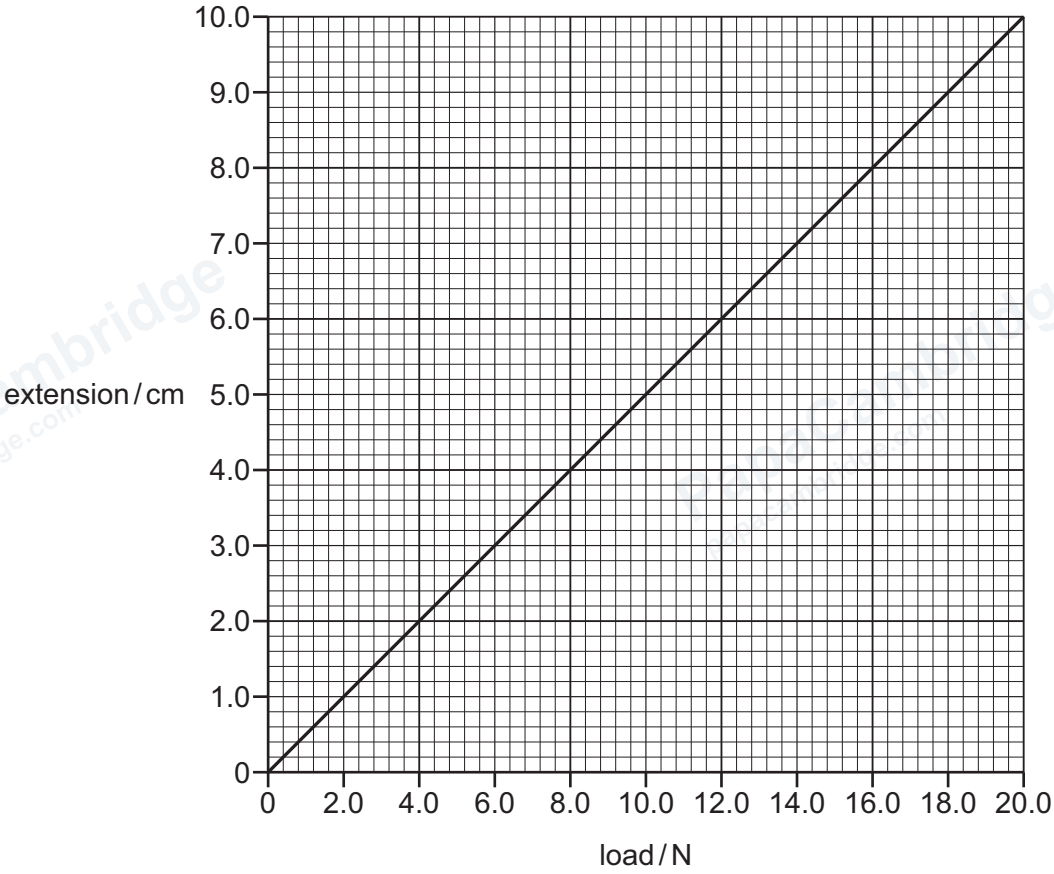

An empty can of weight 3.0 N is suspended from the spring.

Liquid is poured into the can until the extension is 8.0 cm.

What is the weight of the liquid?

A 4.0 N **B** 10.0 N **C** 13.0 N **D** 16.0 N

© Cambridge University Press & Assessment 2026

GradeMax

6 A wooden bar is pivoted at its centre so that it can rotate freely. Two equal forces *F* are applied to the bar.

In which diagram is the turning effect greatest?

A

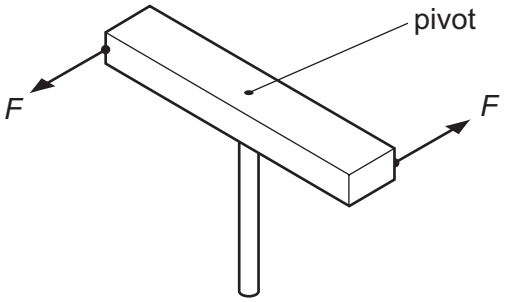

B

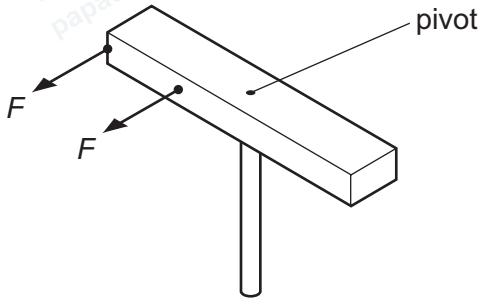

C

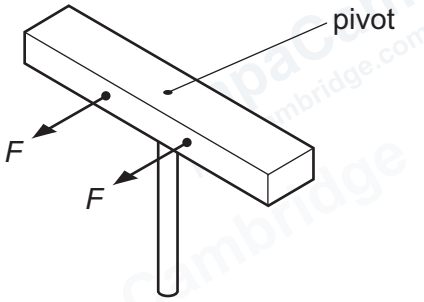

D

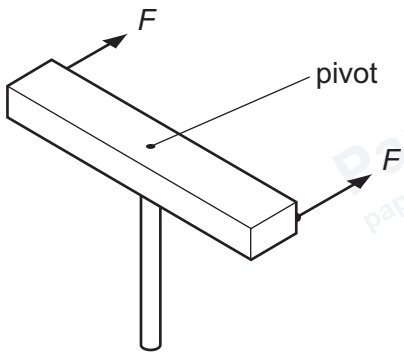

7 The lower its .....1..... of gravity, the greater the .....2..... of an object.

Which words complete gaps 1 and 2?

	1	2
A	centre	stability
B	force	stability
C	centre	weight
D	force	weight

© Cambridge University Press & Assessment 2026

GradeMax

8 Which process involves the transfer of energy by mechanical working?

A radiating thermal energy from a stationary object

B measuring the room temperature with a digital thermometer

C passing an electric current through a LED

D pushing a box along the floor

9 Which quantity is calculated from the product of force and distance moved in the direction of the force?

A power

B pressure

C weight

D work done

10 Which physical quantity has the unit N/m^2?

A density

B moment

C pressure

D speed

11 The three states of matter are solid, liquid and gas.

Which list shows three distinguishing properties of most liquids?

A fixed shape, easily compressed, lowest density

B fixed shape, fixed volume, highest density

C fixed volume, able to flow, easily compressed

D fixed volume, able to flow, no fixed shape

12 The particles of a substance in a particular state of matter move freely with random motion.

The average speed of the particles is increasing.

What is being described?

A a gas being heated

B a liquid evaporating

C a solid being heated

D a solid melting

© Cambridge University Press & Assessment 2026 **[Turn over**

GradeMax

13 A substance melts at –40 °C.

What is its melting point in kelvin?

A –313 K **B** –233 K **C** 40 K **D** 233 K

14 A solid substance is heated from room temperature.

The graph shows how the temperature of the substance changes with time as it is heated constantly.

At which time has the substance just become completely liquid?

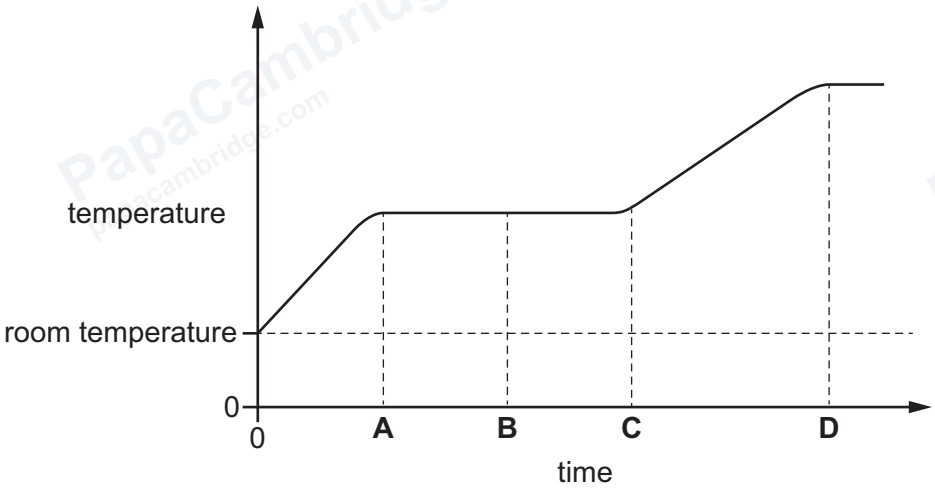

15 A student writes sentences about evaporation, but there are two words missing.

During evaporation, the .....1..... energetic particles escape from the surface of a liquid.

Evaporation causes the temperature of the remaining liquid to .....2..... .

Which words complete gaps 1 and 2?

	1	2
A	least	decrease
B	least	increase
C	most	decrease
D	most	increase

© Cambridge University Press & Assessment 2026

GradeMax

16 Four samples of materials with the same dimensions are tested.

Which material gives the highest rate of thermal conduction?

A rubber

B copper

C plastic

D steel

17 A metal pan contains cold water.

When the pan is placed on a hot stove, the water gets hotter.

By which processes does the heat pass through the metal pan?

A conduction and convection

B conduction only

C convection only

D radiation only

18 Which row gives the correct description of a sound wave?

	action of wave	type of wave
A	transfers energy without transferring matter	longitudinal
B	transfers energy without transferring matter	transverse
C	transfers matter without transferring energy	longitudinal
D	transfers matter without transferring energy	transverse

19 Light from a torch is incident on a plane mirror. The angle of incidence is 38°.

What is the angle of reflection?

A 38° **B** 52° **C** 76° **D** 142°

© Cambridge University Press & Assessment 2026

GradeMax

20 A light ray travelling in air hits the surface of a transparent medium.

The speed of light in air is greater than the speed of light in the medium.

What happens to the ray?

A The ray is refracted with an angle of refraction that is greater than the angle of incidence.

B The ray is totally internally reflected.

C The ray refracts away from the normal.

D The ray refracts towards the normal.

21 A thin, converging lens causes parallel rays of light to converge to a single point known as the principal focus.

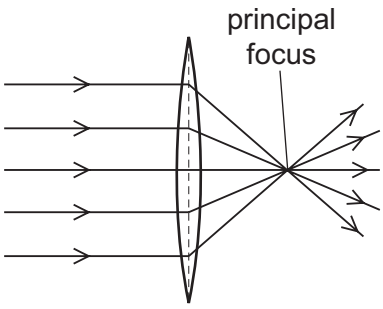

Which statement explains this?

A The light diffracts.

B The light disperses.

C The light reflects.

D The light refracts.

22 White light enters a glass prism and emerges separated into the seven colours of the visible spectrum.

Which term describes this effect?

A dispersion

B reflection

C total internal reflection

D transmission

© Cambridge University Press & Assessment 2026

23 Which radiation has a lower frequency than green light?

A ultraviolet

B X-ray

C gamma radiation

D infrared

24 Satellite phones can use two types of satellite:

- geostationary satellites at a height of about 36 000 km
- or fast-moving low orbit satellites at a height of about 1000 km.

Why do geostationary satellite phones have noticeable delays in conversations during phone calls, but low orbit satellite phones do **not**?

A Microwaves are carried along faster by low orbit satellites.

B Microwaves are only transmitted by the phone when a geostationary satellite is overhead.

C Microwaves used by low orbit satellites are faster than microwaves used by geostationary satellites.

D Microwaves travelling at the same high speed take longer to travel to and from geostationary satellites than to and from low orbit satellites.

25 The graphs show four sound waves as shown on an oscilloscope. The axes have the same scales in each graph.

Which graph represents the loudest sound with the lowest pitch?

A

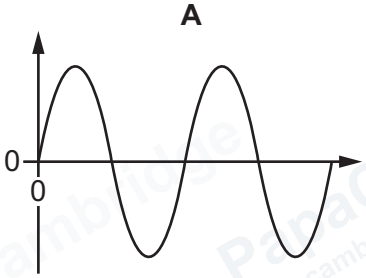

B

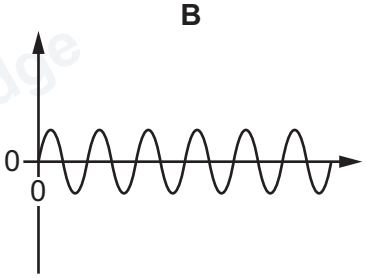

C

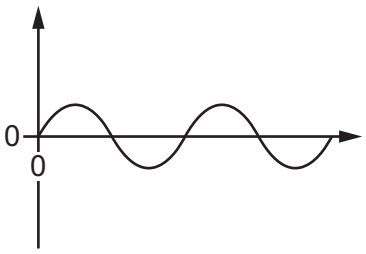

D

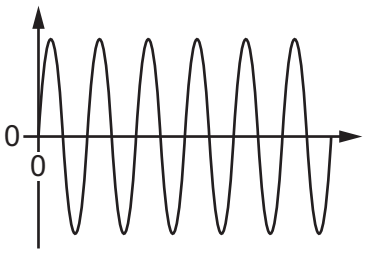

GradeMax

26 The north pole (N pole) of a magnet is moved close to each end of two different rods, X and Y.

Both ends of rod X are attracted to the N pole.

Only one end of rod Y is attracted to the N pole.

Which statement is correct?

A X is a magnet and Y is an unmagnetised iron rod.

B X is an unmagnetised iron rod and Y is a magnet.

C X is a strong magnet and Y is a weak magnet.

D X is a weak magnet and Y is a strong magnet.

27 A student shows that one charged plastic rod repels another charged plastic rod.

Other students make the statements listed.

1 Both rods have gained electrons.

2 Both rods have lost electrons.

3 One rod has gained electrons and one rod has lost electrons.

Which statements are possible explanations of what the student shows?

A 1 and 2 **B** 1 and 3 **C** 2 and 3 **D** 3 only

28 An electric current in a copper wire is due to the flow of charges.

Which particles are moving along the wire?

A α-particles

B copper nuclei

C electrons

D protons

29 Which unit is equivalent to 1.0 V?

A 1.0 J / A **B** 1.0 J / C **C** 1.0 J / s **D** 1.0 J / Ω

30 The potential difference (p.d.) across a resistor of resistance 24 Ω is 2.0 V.

What is the current in the resistor?

A 0.021 A **B** 0.083 A **C** 12 A **D** 48 A

© Cambridge University Press & Assessment 2026

GradeMax

31 There is a current of 5.0 A in a resistor.

The potential difference (p.d.) across the resistor is 24 V.

How much energy is transferred in the resistor in 1.0 minute?

A 5.0 J **B** 120 J **C** 290 J **D** 7200 J

32 Which circuit contains a fuse, a heater and a lamp?

A

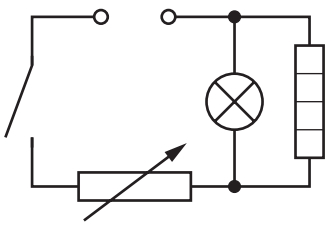

B

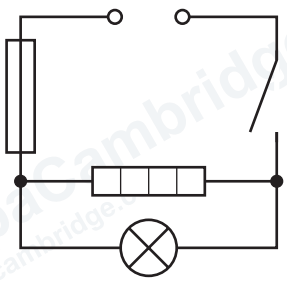

C

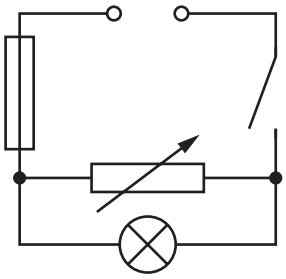

D

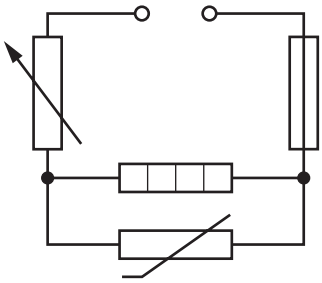

GradeMax

33 The diagrams show similar circuits with an ammeter connected at four different points.

In which circuit will the ammeter show the highest current reading?

A

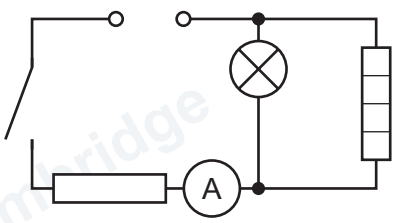

B

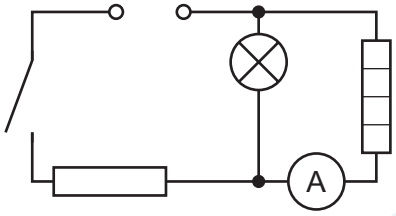

C

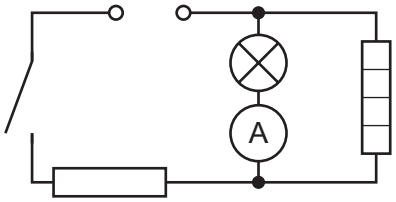

D

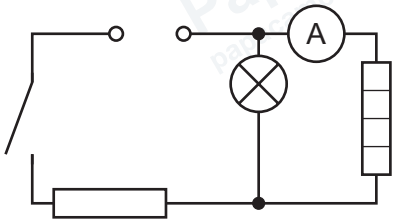

34 The metal cases of electrical appliances are connected to an earth wire.

Which statement is **not** correct?

A The live wire may become loose and touch the metal case.

B If the metal case becomes live, the earth wire conducts current to the ground.

C The earth wire needs to have a high resistance.

D Earthing metal cases helps prevent a person from receiving an electric shock.

35 Which statement is correct?

A A transformer is used to step up the voltage so that current is transmitted more efficiently.

B A transformer is used to step up the current so that power is transmitted more efficiently.

C A transformer is used to step up the voltage so that power is transmitted more efficiently.

D A transformer is used to step up the current so that voltage is transmitted more efficiently.

36 Which particles are found in the nuclei of atoms?

A protons, neutrons and electrons

B protons and neutrons only

C neutrons only

D electrons only

© Cambridge University Press & Assessment 2026

37 Which statement about radioactive decay by α, β and γ emission is correct?

A The only type of radioactive decay that changes a nucleus of one element to that of another element is α-decay.

B The only types of radioactive decay that change a nucleus of one element to that of another element are α-decay and β-decay.

C The only types of radioactive decay that change a nucleus of one element to that of another element are α-decay and γ-emission.

D The only types of radioactive decay that change a nucleus of one element to that of another element are β-decay and γ-emission.

38 A sample of a radioactive isotope has a mass of 100 g. The half-life of the radioactive isotope is 6.0 hours.

Which graph shows the decay for this isotope?

A

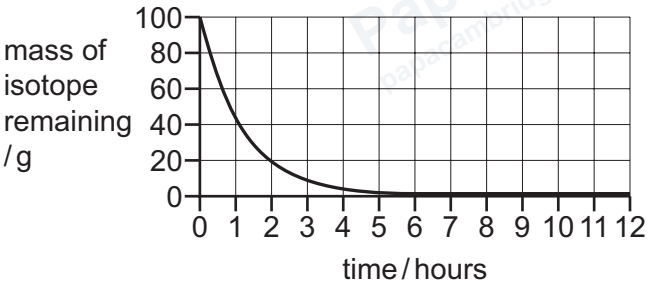

B

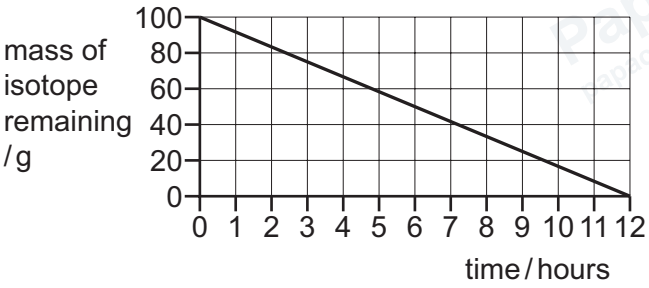

C

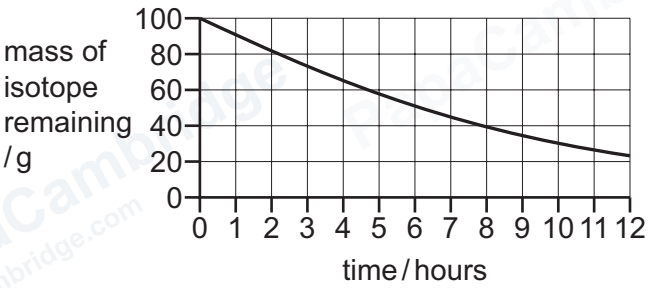

D

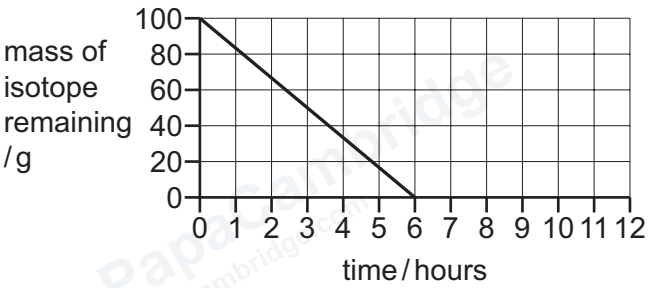

39 Which type of object orbits planets?

A asteroids

B comets

C dwarf planets

D moons

© Cambridge University Press & Assessment 2026 **[Turn over**

GradeMax

40 What is the Milky Way?

A It is a galaxy.

B It is a group of seven stars.

C It is a star.

D It is a nebula.

© Cambridge University Press & Assessment 2026

GradeMax

BLANK PAGE

© Cambridge University Press & Assessment 2026

GradeMax

BLANK PAGE

Permission to reproduce items where third-party owned material protected by copyright is included has been sought and cleared where possible. Every reasonable effort has been made by the publisher (Cambridge University Press & Assessment) to trace copyright holders, but if any items requiring clearance have unwittingly been included, the publisher will be pleased to make amends at the earliest possible opportunity.

To avoid the issue of disclosure of answer-related information to candidates, all copyright acknowledgements are reproduced online in our Copyright Acknowledgements Booklet. This is produced for each series of examinations and is freely available to download at www.cambridgeinternational.org after the live examination series.

Cambridge International Education is the name of our awarding body and a part of Cambridge University Press & Assessment, which is a department of the University of Cambridge.

© Cambridge University Press & Assessment 2026