GradeMax

* 0000800000001 * DFD

CAMBRIDGE
International Education

Cambridge IGCSE™

CANDIDATE NAME

CENTRE NUMBER

CANDIDATE NUMBER

PHYSICS **0625/32**

Paper 3 Theory (Core) **February/March 2026**

1 hour 15 minutes

You must answer on the question paper.

No additional materials are needed.

INSTRUCTIONS

- Answer **all** questions.
- Use a black or dark blue pen. You may use an HB pencil for any diagrams or graphs.
- Write your name, centre number and candidate number in the boxes at the top of the page.
- Write your answer to each question in the space provided.
- Do **not** use an erasable pen. Do **not** use correction fluid or tape.
- Do **not** write on any bar codes.
- You may use a calculator.
- You should show all your working and use appropriate units.
- Take the weight of 1.0 kg to be 9.8 N (acceleration of free fall = 9.8 m / s^2).

INFORMATION

- The total mark for this paper is 80.
- The number of marks for each question or part question is shown in brackets [ ].

This document has **20** pages. Any blank pages are indicated.

DC (WW/TC) 363719/3
© Cambridge University Press & Assessment 2026

[Turn over

GradeMax

1 A student pulls a trolley around a shop. Figure 1.1 shows the trolley.

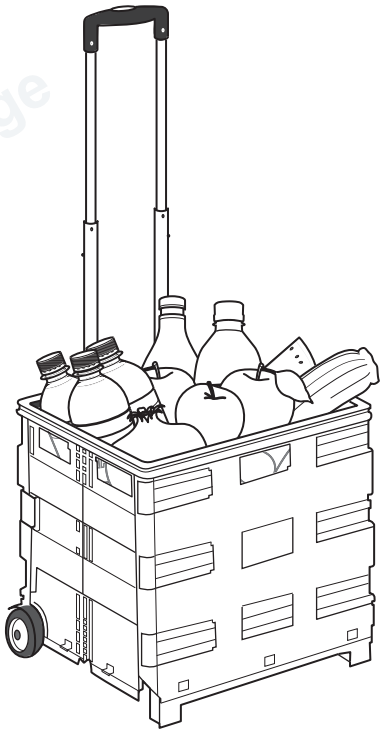

Figure 1.1

(a) The student pulls the trolley with a force of 24 N for a distance of 15 m in the direction of the force.

Calculate the work done by the 24 N force.

work done = ... J [3]

DO NOT WRITE IN THIS MARGIN
DO NOT WRITE IN THIS MARGIN
DO NOT WRITE IN THIS MARGIN
DO NOT WRITE IN THIS MARGIN
DO NOT WRITE IN THIS MARGIN

© Cambridge University Press & Assessment 2026

GradeMax

(b) Figure 1.2 shows the empty trolley lying on the floor.

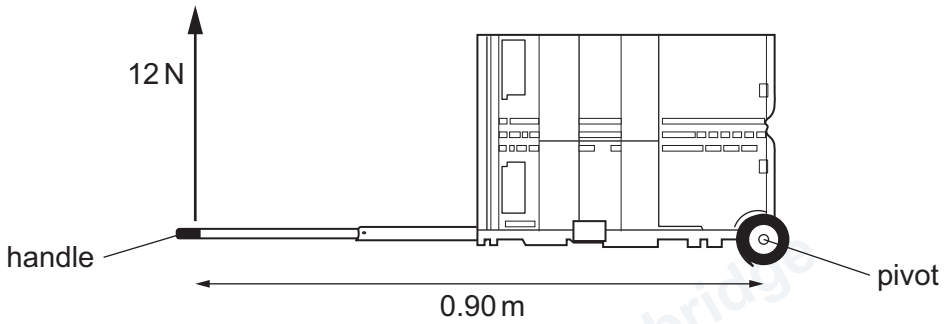

Figure 1.2

The student lifts the handle by applying a force of 12 N, as shown in Figure 1.2.

Calculate the moment of the 12 N force about the pivot.

moment = ... Nm [3]

DO NOT WRITE IN THIS MARGIN
DO NOT WRITE IN THIS MARGIN
DO NOT WRITE IN THIS MARGIN
DO NOT WRITE IN THIS MARGIN
DO NOT WRITE IN THIS MARGIN

© Cambridge University Press & Assessment 2026

(c) Figure 1.3 shows the speed-time graph for part of the movement of the trolley around the shop.

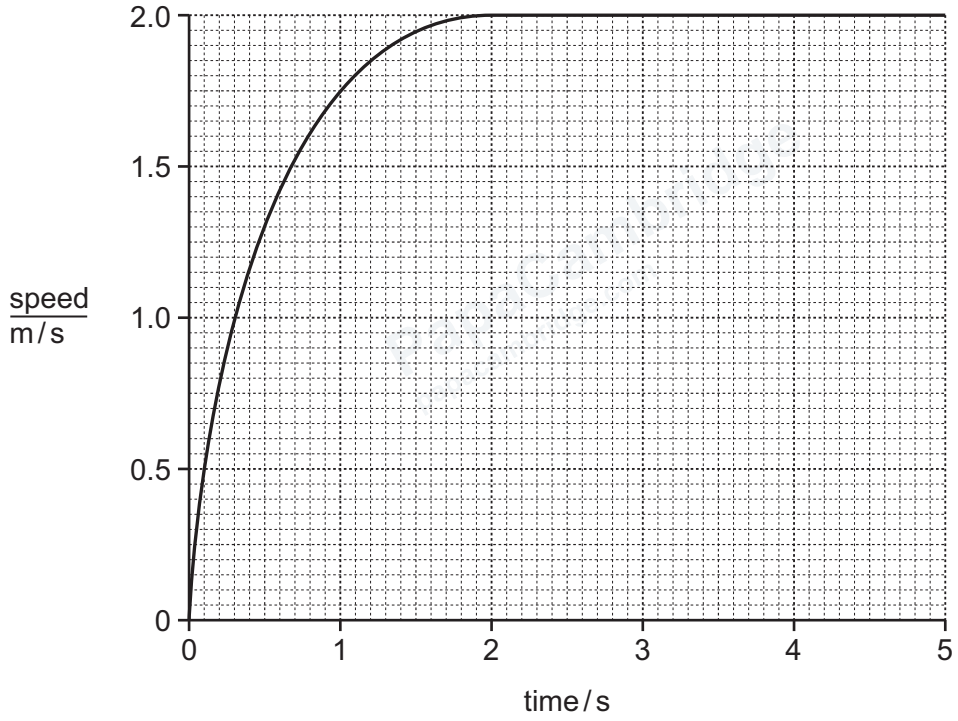

Figure 1.3

(i) Describe the speed of the trolley:

between time = 0 and time = 1.0 s .....

between time = 2.0 s and time = 5.0 s .....
[2]

(ii) Calculate the distance travelled by the trolley between time = 2.0 s and time = 5.0 s.

distance travelled = ... m [3]

[Total: 11]

© Cambridge University Press & Assessment 2026

DO NOT WRITE IN THIS MARGIN
DO NOT WRITE IN THIS MARGIN
DO NOT WRITE IN THIS MARGIN
DO NOT WRITE IN THIS MARGIN
DO NOT WRITE IN THIS MARGIN

GradeMax

2 A student is measuring the time period for a pendulum. Figure 2.1 shows the equipment.

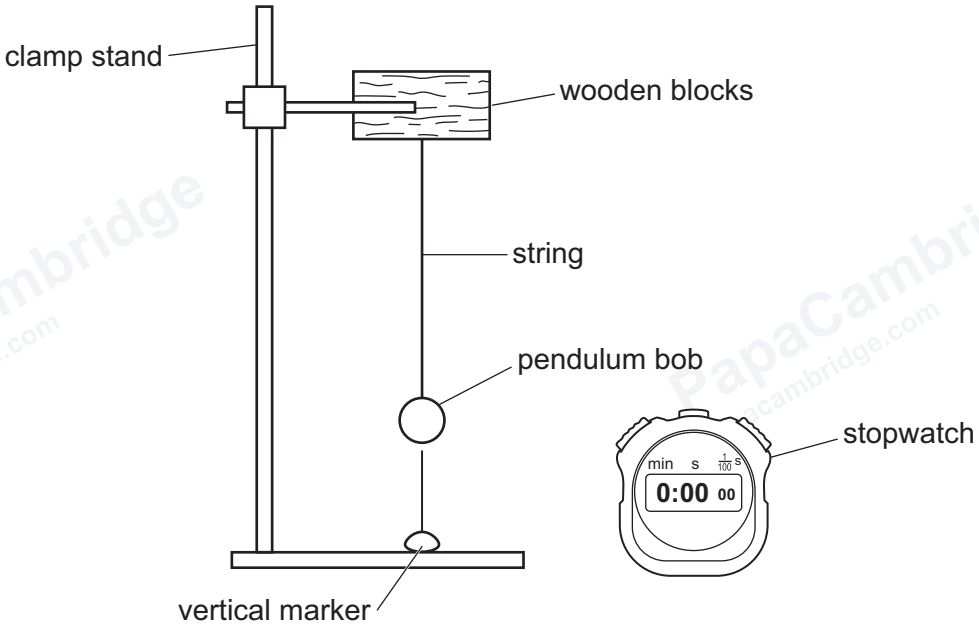

Figure 2.1

(a) The student pulls the pendulum bob to the side, as shown in Figure 2.2. The student then releases the pendulum bob.

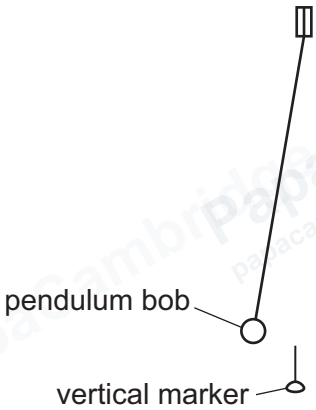

Figure 2.2

Describe how the student uses the equipment to determine the time period for the pendulum bob.

.....

.....

.....

.....

.....

..... [4]

© Cambridge University Press & Assessment 2026

DO NOT WRITE IN THIS MARGIN
DO NOT WRITE IN THIS MARGIN
DO NOT WRITE IN THIS MARGIN
DO NOT WRITE IN THIS MARGIN
DO NOT WRITE IN THIS MARGIN

(b) Figure 2.3 shows the horizontal forces on the pendulum bob after the student releases it.

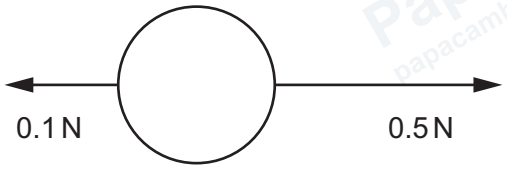

not to scale

Figure 2.3

Calculate the resultant horizontal force on the load.

resultant force = ... N

direction .....

[2]

(c) Figure 2.4 shows the reading on the stopwatch after one measurement.



Figure 2.4

Determine the time shown on the stopwatch in seconds.

time = ... s [1]

(d) Complete the sentences explaining what is meant by mass and weight.

(i) Mass is a measure of the ..... in an object. [1]

(ii) Weight is the ..... on an object that has mass. [1]

[Total: 9]

© Cambridge University Press & Assessment 2026

GradeMax

DO NOT WRITE IN THIS MARGIN

DO NOT WRITE IN THIS MARGIN

DO NOT WRITE IN THIS MARGIN

DO NOT WRITE IN THIS MARGIN

DO NOT WRITE IN THIS MARGIN

GradeMax

3 Figure 3.1 shows a solar panel charging a mobile phone (cell phone).

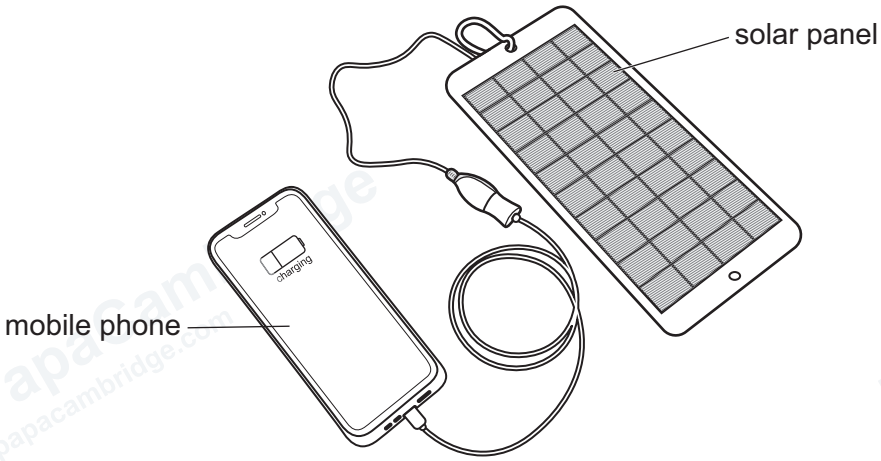

Figure 3.1

(a) Figure 3.2 shows the energy transfer diagram for the solar panel charging the mobile phone.

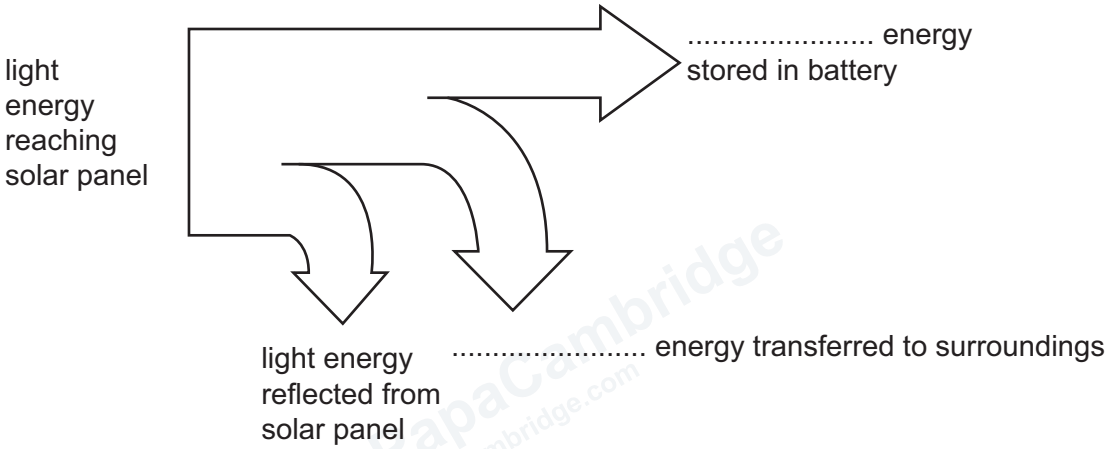

Figure 3.2

Complete the energy transfer diagram. [2]

(b) The voltage output of the solar panel is 4.5V. The current output from the solar panel is 0.62A.

Calculate the power output from the solar panel.

power output = ... W [3]

(c) State **one** advantage and **one** disadvantage, apart from cost, of using the solar panel to charge the mobile (cell) phone instead of using a mains power supply to recharge the battery.

advantage .....

disadvantage .....

[2]

[Total: 7]

© Cambridge University Press & Assessment 2026

DO NOT WRITE IN THIS MARGIN
DO NOT WRITE IN THIS MARGIN
DO NOT WRITE IN THIS MARGIN
DO NOT WRITE IN THIS MARGIN
DO NOT WRITE IN THIS MARGIN

GradeMax

4 This question is about solids, liquids and gases.

(a) Describe the arrangement, separation and motion of the particles in a solid.

.....

.....

..... [3]

(b) Figure 4.1 shows the path of a pollen grain in a drop of water. The pollen grain is a microscopic particle.

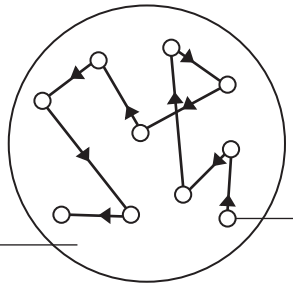

Figure 4.1

Describe and explain the motion of the pollen grain.

.....

.....

..... [3]

DO NOT WRITE IN THIS MARGIN
DO NOT WRITE IN THIS MARGIN
DO NOT WRITE IN THIS MARGIN
DO NOT WRITE IN THIS MARGIN
DO NOT WRITE IN THIS MARGIN

© Cambridge University Press & Assessment 2026

GradeMax

(c) A student inflates two identical balloons with the same mass of air so they are the same volume. The student places one of the balloons in a freezer and the other in a warm room. After two hours, the balloons still contain the same mass of air but the cold balloon is smaller, as shown in Figure 4.2.

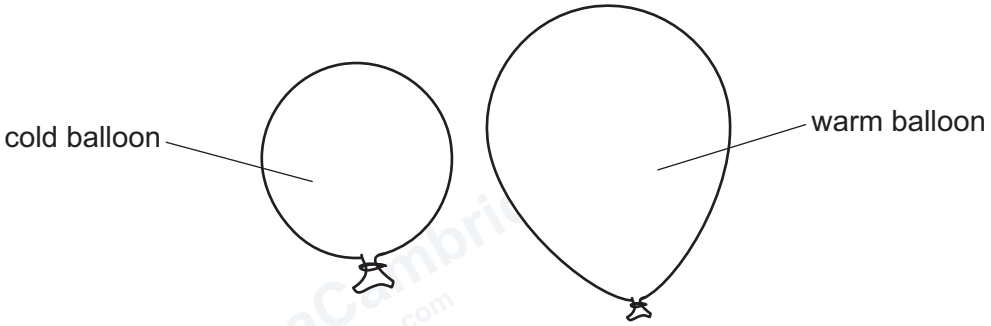

Figure 4.2

Explain why the cold balloon becomes smaller than the warm balloon.
Use your ideas about the motion of particles.

.....

.....

..... [3]

[Total: 9]

DO NOT WRITE IN THIS MARGIN
DO NOT WRITE IN THIS MARGIN
DO NOT WRITE IN THIS MARGIN
DO NOT WRITE IN THIS MARGIN
DO NOT WRITE IN THIS MARGIN

5 Figure 5.1 shows how the displacement of particles in a transverse wave varies with distance.

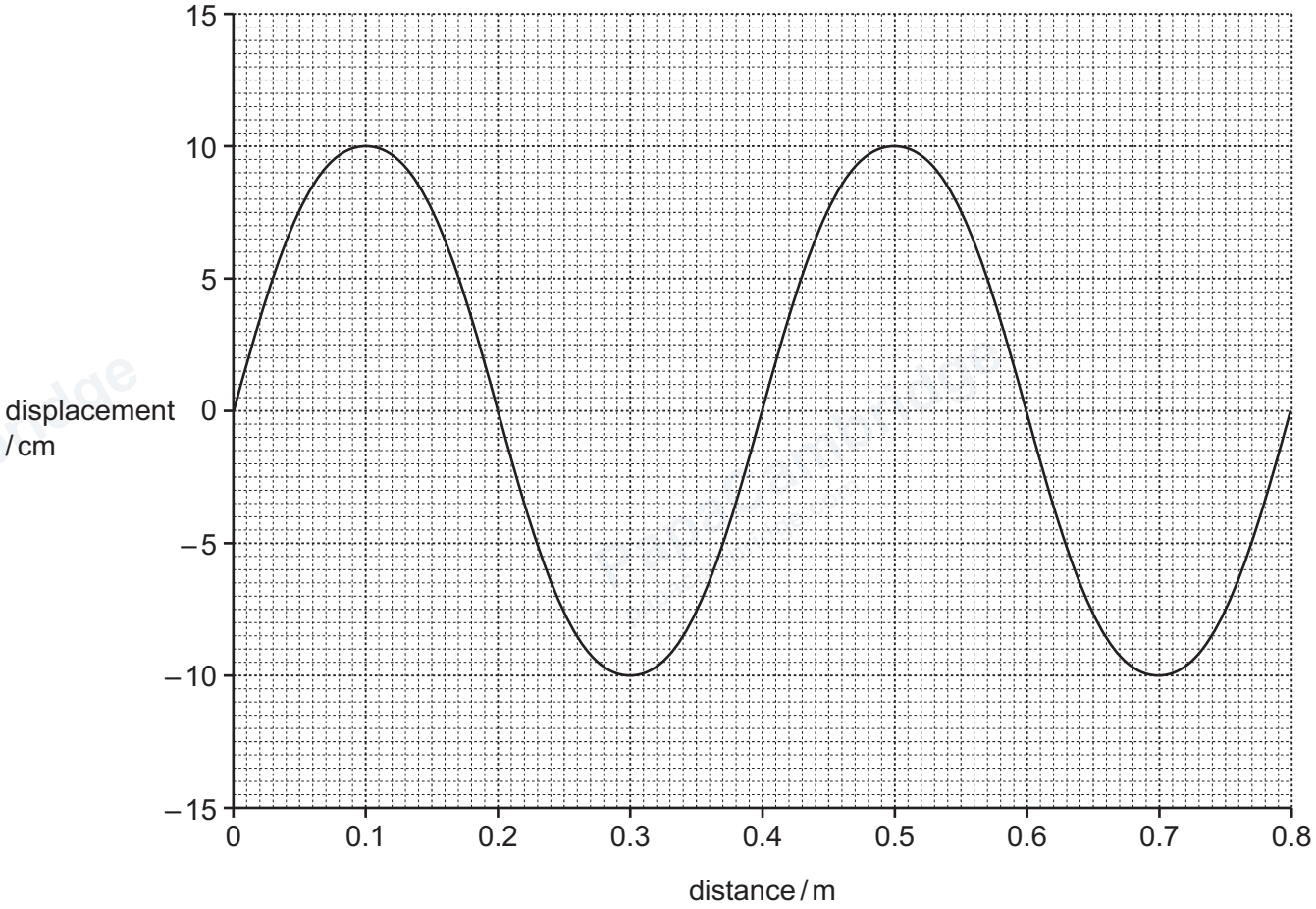

Figure 5.1

(a) (i) Determine the amplitude of the wave in Figure 5.1.

amplitude = ... cm [1]

(ii) Determine the wavelength of the wave in Figure 5.1.

wavelength = ... cm [1]

(b) The wave speed of a gamma ray is 3.0×10^8 m/s. The frequency of the gamma ray is 5.0×10^{20} Hz.

Calculate the wavelength of the gamma ray.

wavelength = ... m [3]

© Cambridge University Press & Assessment 2026

GradeMax

DO NOT WRITE IN THIS MARGIN
DO NOT WRITE IN THIS MARGIN
DO NOT WRITE IN THIS MARGIN
DO NOT WRITE IN THIS MARGIN
DO NOT WRITE IN THIS MARGIN

GradeMax

(c) (i) Give **one** use of gamma rays.

..... [1]

(ii) Give **one** harmful effect of excessive exposure to gamma rays.

..... [1]

[Total: 7]

DO NOT WRITE IN THIS MARGIN
DO NOT WRITE IN THIS MARGIN
DO NOT WRITE IN THIS MARGIN
DO NOT WRITE IN THIS MARGIN
DO NOT WRITE IN THIS MARGIN

GradeMax

6 **(a)** Figure 6.1 shows a ray of red light reflected by a plane mirror.

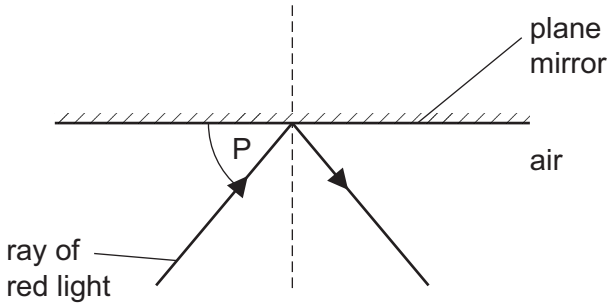

Figure 6.1

(i) Give the name of the dashed line on Figure 6.1.

..... [1]

(ii) The value of angle P on Figure 6.1 is 50°.

Determine the value of the angle of reflection for the ray of red light.

..... [1]

(b) In question **6(b)**, each figure shows light travelling into and out of a glass block.

(i) Complete the sentence for Figure 6.2 by stating the name of the process.

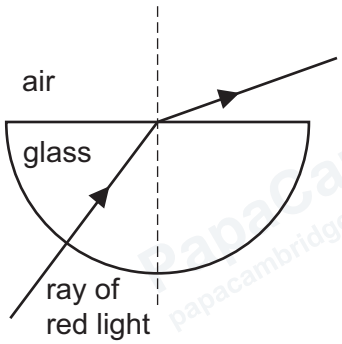

Figure 6.2

At the glass-air boundary, the ray of red light changes direction.

This is ..... . [1]

DO NOT WRITE IN THIS MARGIN
DO NOT WRITE IN THIS MARGIN
DO NOT WRITE IN THIS MARGIN
DO NOT WRITE IN THIS MARGIN
DO NOT WRITE IN THIS MARGIN

© Cambridge University Press & Assessment 2026

GradeMax

(ii) Complete the sentence for Figure 6.3 by stating the name of the process.

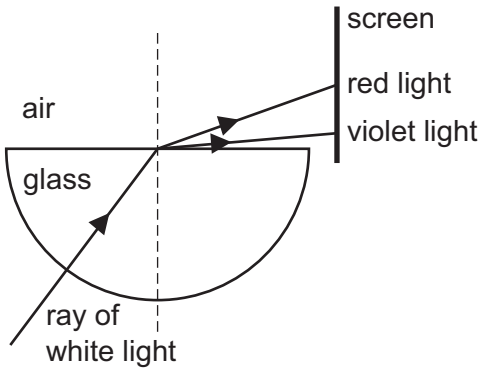

Figure 6.3

The separation of white light into the colours of the spectrum is ..... . [1]

(iii) Complete the sentence for Figure 6.4 by stating the name of the process.

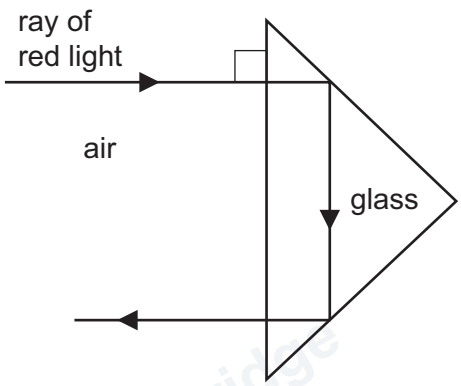

Figure 6.4

The change in direction of the ray of red light at each

surface is ..... . [1]

[Total: 5]

DO NOT WRITE IN THIS MARGIN
DO NOT WRITE IN THIS MARGIN
DO NOT WRITE IN THIS MARGIN
DO NOT WRITE IN THIS MARGIN
DO NOT WRITE IN THIS MARGIN

© Cambridge University Press & Assessment 2026

7 Figure 7.1 represents the magnetic field around a bar magnet.

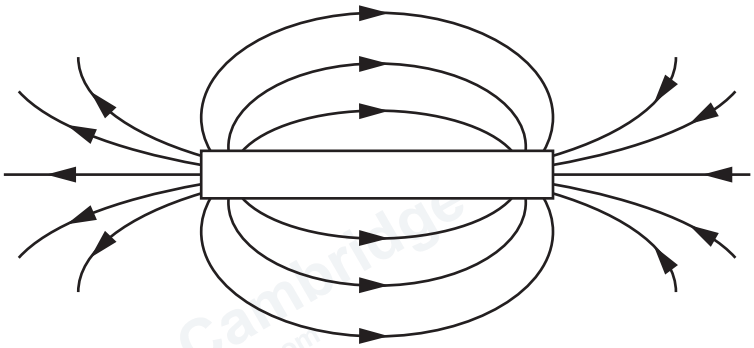

Figure 7.1

(a) (i) Label the N pole (north-seeking pole) and S pole (south-seeking pole) of the bar magnet in Figure 7.1. [1]

(ii) Complete the sentence about magnetic fields.

The direction of the magnetic field is the direction of the force on .....

..... . [1]

(iii) State the name of the device that is used to determine the direction of the magnetic field.

..... [1]

(b) Figure 7.2 shows an electromagnet.

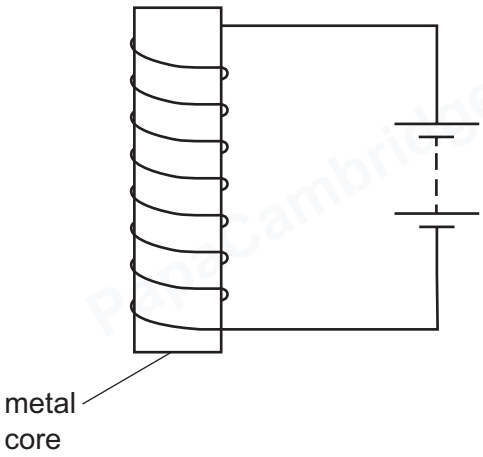

Figure 7.2

State the name of a metal that is suitable for the core of the electromagnet.

..... [1]

DO NOT WRITE IN THIS MARGIN
DO NOT WRITE IN THIS MARGIN
DO NOT WRITE IN THIS MARGIN
DO NOT WRITE IN THIS MARGIN
DO NOT WRITE IN THIS MARGIN

© Cambridge University Press & Assessment 2026

GradeMax

(c) A student switches on the electromagnet. The student places two steel paper clips close to the electromagnet. The metal core in the electromagnet attracts the paper clips, as shown in Figure 7.3.

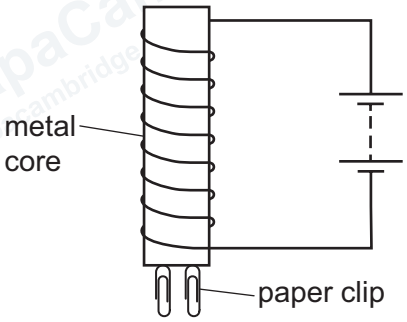

Figure 7.3

Explain why the metal core in the electromagnet attracts the paper clips as shown in Figure 7.3.

.....

.....

.....

..... [2]

[Total: 6]

DO NOT WRITE IN THIS MARGIN
DO NOT WRITE IN THIS MARGIN
DO NOT WRITE IN THIS MARGIN
DO NOT WRITE IN THIS MARGIN
DO NOT WRITE IN THIS MARGIN

© Cambridge University Press & Assessment 2026

8 Figure 8.1 shows three identical lamps in a circuit. The circuit is incomplete.

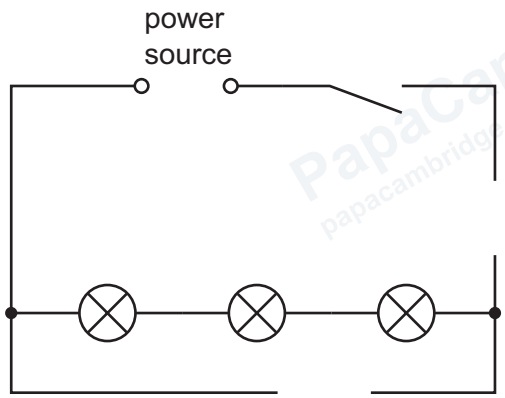

Figure 8.1

(a) Draw on Figure 8.1 to complete the circuit by adding the electrical symbols for the meters to measure the current in the lamps and the potential difference for the lamps. [2]

(b) The resistance of each lamp is 6.0 Ω.

Calculate the combined resistance of the three lamps.

combined resistance = ... Ω [1]

(c) Complete the sentence about electrical current.

An electric current in a metal is a flow of ..... . [1]

(d) The current in one lamp is 0.45 A and the potential difference across the lamp is 6.7 V. The lamp is switched on for a time of 50 s.

Calculate the energy supplied to the lamp.

energy supplied = ... J [3]

[Total: 7]

© Cambridge University Press & Assessment 2026

DO NOT WRITE IN THIS MARGIN
DO NOT WRITE IN THIS MARGIN
DO NOT WRITE IN THIS MARGIN
DO NOT WRITE IN THIS MARGIN
DO NOT WRITE IN THIS MARGIN

GradeMax

9 Figure 9.1 shows a laptop with a cable that connects its charger to the mains electricity supply.

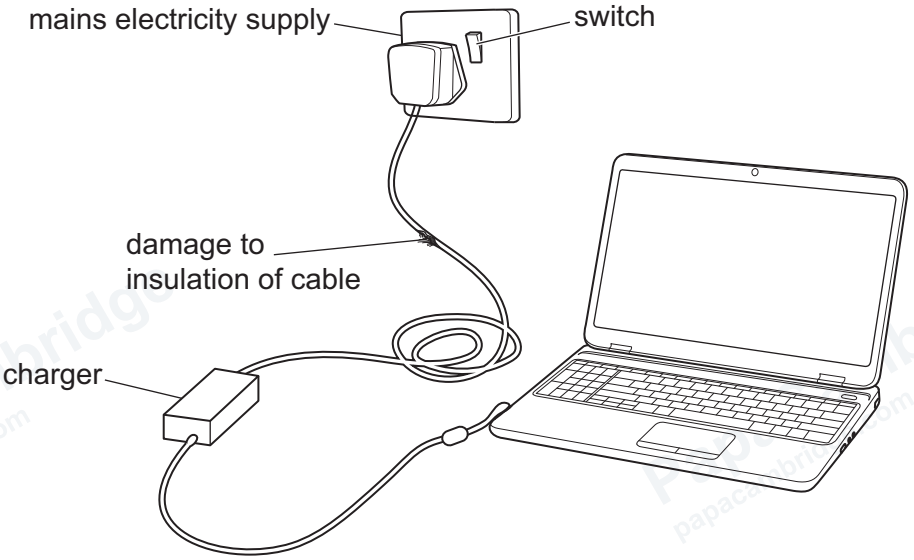

Figure 9.1

(a) (i) State the hazard due to any damaged insulation on the cable connected to the mains electricity supply.

..... [1]

(ii) State and explain in which wire in the mains electricity supply the switch is connected.

switch is connected in the ..... .

explanation .....

[2]

(b) The charger includes a transformer. The voltage to the primary coil of the transformer V_p is 240 V.
The secondary voltage V_s for the transformer is 16 V.
The number of turns on the primary coil N_p is 900.

Calculate the number of turns on the secondary coil N_s for the transformer.

number of turns on secondary coil = ... [3]

[Total: 6]

© Cambridge University Press & Assessment 2026

DO NOT WRITE IN THIS MARGIN
DO NOT WRITE IN THIS MARGIN
DO NOT WRITE IN THIS MARGIN
DO NOT WRITE IN THIS MARGIN
DO NOT WRITE IN THIS MARGIN

GradeMax

10 A nucleus of iodine-125 has the nuclide notation:

$$^{125}_{53}\mathrm{I}$$

(a) Determine the number of:

protons in **one** nucleus of iodine-125,

.....

neutrons in **one** nucleus of iodine-125.

.....

[2]

(b) Iodine-125 has a half-life of 60 days.
A radioactive source contains 40 mg of iodine-125.

Calculate the mass of iodine-125 that remains in the source after 180 days.

mass of iodine-125 remaining = ... mg [3]

(c) Iodine-123 is another isotope of iodine.

State the meaning of the term, isotope.

.....

..... [2]

[Total: 7]

DO NOT WRITE IN THIS MARGIN
DO NOT WRITE IN THIS MARGIN
DO NOT WRITE IN THIS MARGIN
DO NOT WRITE IN THIS MARGIN
DO NOT WRITE IN THIS MARGIN

© Cambridge University Press & Assessment 2026

GradeMax

11 **(a)** Describe the motion of the planet Earth.

In your answer, include the values for any times of rotation or orbit that you describe.

.....

.....

.....

.....

.....

..... [3]

(b) State the meaning of the term light-year.

.....

..... [2]

(c) Distant galaxies emit light as they move away from us.
State the term for the increase in the wavelength of this light when observed on Earth.

..... [1]

[Total: 6]

DO NOT WRITE IN THIS MARGIN
DO NOT WRITE IN THIS MARGIN
DO NOT WRITE IN THIS MARGIN
DO NOT WRITE IN THIS MARGIN
DO NOT WRITE IN THIS MARGIN

© Cambridge University Press & Assessment 2026

GradeMax

BLANK PAGE

DO NOT WRITE IN THIS MARGIN
DO NOT WRITE IN THIS MARGIN
DO NOT WRITE IN THIS MARGIN
DO NOT WRITE IN THIS MARGIN
DO NOT WRITE IN THIS MARGIN

Permission to reproduce items where third-party owned material protected by copyright is included has been sought and cleared where possible. Every reasonable effort has been made by the publisher (Cambridge University Press & Assessment) to trace copyright holders, but if any items requiring clearance have unwittingly been included, the publisher will be pleased to make amends at the earliest possible opportunity.

To avoid the issue of disclosure of answer-related information to candidates, all copyright acknowledgements are reproduced online in our Copyright Acknowledgements Booklet. This is produced for each series of examinations and is freely available to download at www.cambridgeinternational.org after the live examination series.

Cambridge International Education is the name of our awarding body and a part of Cambridge University Press & Assessment, which is a department of the University of Cambridge.

© Cambridge University Press & Assessment 2026