GradeMax

* 0000800000001 * DFD

CAMBRIDGE
International Education

# Cambridge IGCSE™

CANDIDATE NAME

CENTRE NUMBER

CANDIDATE NUMBER

* 8 8 5 2 3 4 1 8 8 1 *

**PHYSICS** **0625/42**

Paper 4 Theory (Extended) **February/March 2026**

**1 hour 15 minutes**

You must answer on the question paper.

No additional materials are needed.

**INSTRUCTIONS**

- Answer **all** questions.
- Use a black or dark blue pen. You may use an HB pencil for any diagrams or graphs.
- Write your name, centre number and candidate number in the boxes at the top of the page.
- Write your answer to each question in the space provided.
- Do **not** use an erasable pen. Do **not** use correction fluid or tape.
- Do **not** write on any bar codes.
- You may use a calculator.
- You should show all your working and use appropriate units.
- Take the weight of 1.0 kg to be 9.8 N (acceleration of free fall = 9.8 m / $s^2$).

**INFORMATION**

- The total mark for this paper is 80.
- The number of marks for each question or part question is shown in brackets [ ].

This document has **16** pages. Any blank pages are indicated.

DC (EV/FC) 363720/2
© Cambridge University Press & Assessment 2026

**[Turn over**

GradeMax



**BLANK PAGE**

DO NOT WRITE IN THIS MARGIN
DO NOT WRITE IN THIS MARGIN
DO NOT WRITE IN THIS MARGIN
DO NOT WRITE IN THIS MARGIN
DO NOT WRITE IN THIS MARGIN

© Cambridge University Press & Assessment 2026

GradeMax



**1** A student cycles from home to school. Figure 1.1 shows the distance–time graph for this journey.

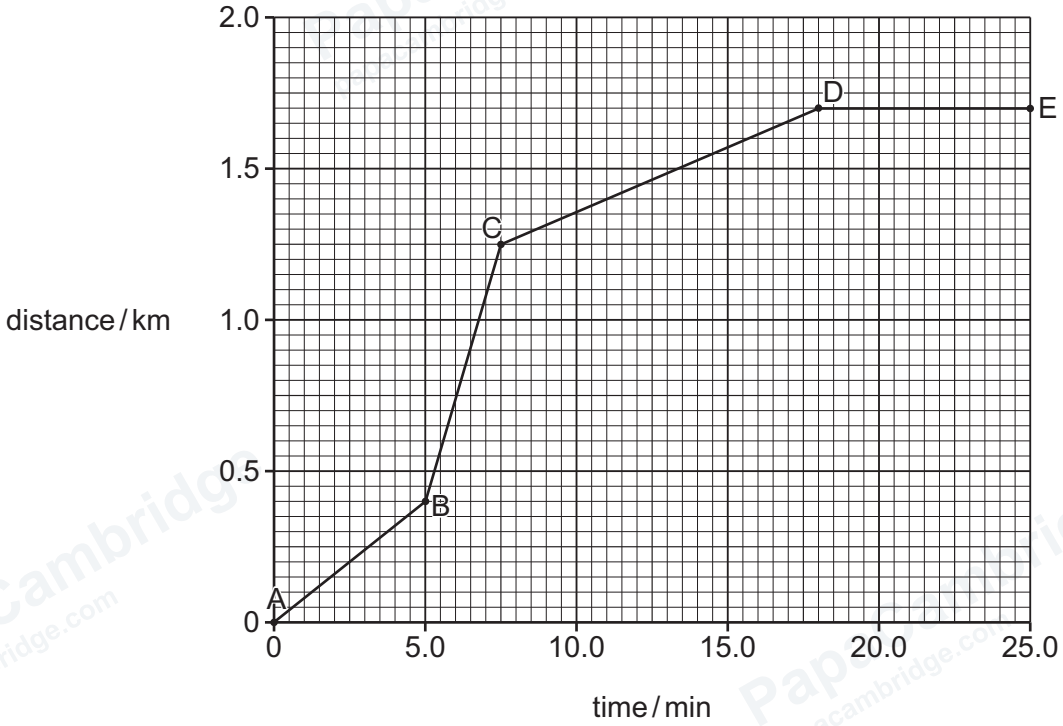


**Figure 1.1**

**(a)** State the distance between home and school.

distance = ..... km [1]

**(b)** State **one** point, A, B, C, D or E which identifies a time when:

1 the student accelerates .....

2 the student decelerates .....

[2]

**(c)** Use Figure 1.1 to calculate the student's maximum speed in km / h.

maximum speed = ..... km / h [3]

[Total: 6]

DO NOT WRITE IN THIS MARGIN
DO NOT WRITE IN THIS MARGIN
DO NOT WRITE IN THIS MARGIN
DO NOT WRITE IN THIS MARGIN
DO NOT WRITE IN THIS MARGIN

© Cambridge University Press & Assessment 2026 

**2** Figure 2.1 shows a ship made of steel floating on the sea.

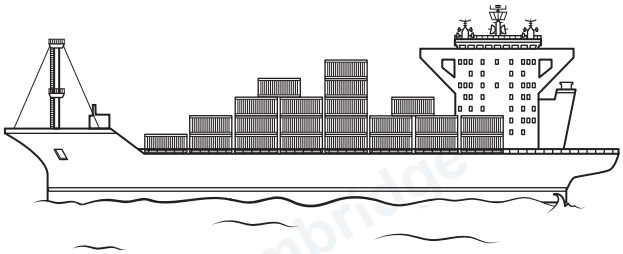

**Figure 2.1**

**(a) (i)** State the equation that links density, mass and volume.

..... [1]

**(ii)** The density of steel is 7900 kg / $m^3$. The mass of a solid steel cube is 110 kg.

Calculate the volume of the steel cube.

volume = ..... $m^3$ [1]

**(iii)** The density of sea water is 1030 kg / $m^3$.

State why the solid steel cube sinks when placed in sea water.

.....

..... [1]

**(iv)** Explain why the steel ship in Figure 2.1 floats on the sea water.

.....

.....

..... [2]

DO NOT WRITE IN THIS MARGIN
DO NOT WRITE IN THIS MARGIN
DO NOT WRITE IN THIS MARGIN
DO NOT WRITE IN THIS MARGIN
DO NOT WRITE IN THIS MARGIN

© Cambridge University Press & Assessment 2026 

GradeMax



**(b)** The mass of the ship is $3.5 \times 10^7$ kg. The ship accelerates at $0.75\,m/s^2$.

**(i)** Calculate the force which causes this acceleration.

force = ..... N [2]

**(ii)** Explain why the force provided by the ship's engine must be larger than the value in **2(b)(i)**.

.....

..... [2]

[Total: 9]

DO NOT WRITE IN THIS MARGIN
DO NOT WRITE IN THIS MARGIN
DO NOT WRITE IN THIS MARGIN
DO NOT WRITE IN THIS MARGIN
DO NOT WRITE IN THIS MARGIN

© Cambridge University Press & Assessment 2026

**3** Figure 3.1 shows a polar bear and a person standing on thick ice. The figures are drawn to a scale of 1 cm : 100 cm

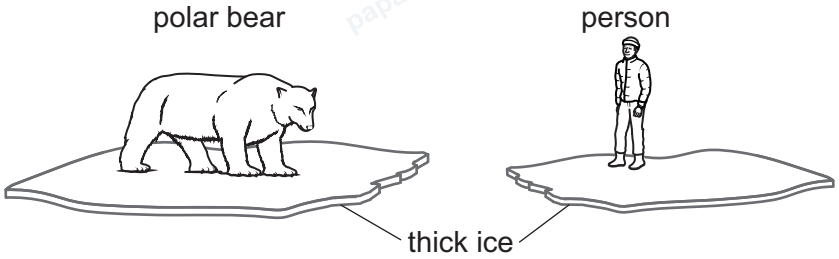


**Figure 3.1**

Table 3.1 contains information about the polar bear and the person.

**Table 3.1**

| | **polar bear** | **person** |
|---|---|---|
| mass / kg | 590 | 84 |
| area in contact with ice / $m^2$ | 1.12 | 0.020 |

**(a) (i)** Calculate the weight of the polar bear.

weight = ..... N [1]

**(ii)** Calculate the pressure that the polar bear exerts on the ice.

pressure = ..... Pa [2]

DO NOT WRITE IN THIS MARGIN

GradeMax



**(iii)** Use the numbers to complete each equation.

Each number may be used once, more than once or not at all.

0.125 7.0 8.0 56 392

mass of polar bear = ..... × mass of person

area of polar bear in contact with ice = ..... × area of person in contact with ice

pressure exerted by person = ..... × pressure exerted by polar bear

[2]

**(b)** Under the ice is sea water with a density of 1030 kg / $m^3$.

Calculate the change in pressure $\Delta p$ between the top of the sea water and a depth of 2.50 m.

$\Delta p$ = ..... Pa [2]

[Total: 7]

DO NOT WRITE IN THIS MARGIN
DO NOT WRITE IN THIS MARGIN
DO NOT WRITE IN THIS MARGIN
DO NOT WRITE IN THIS MARGIN
DO NOT WRITE IN THIS MARGIN

© Cambridge University Press & Assessment 2026

GradeMax



**4** An outdoor heater warms people sitting outside. Figure 4.1 shows the heater.

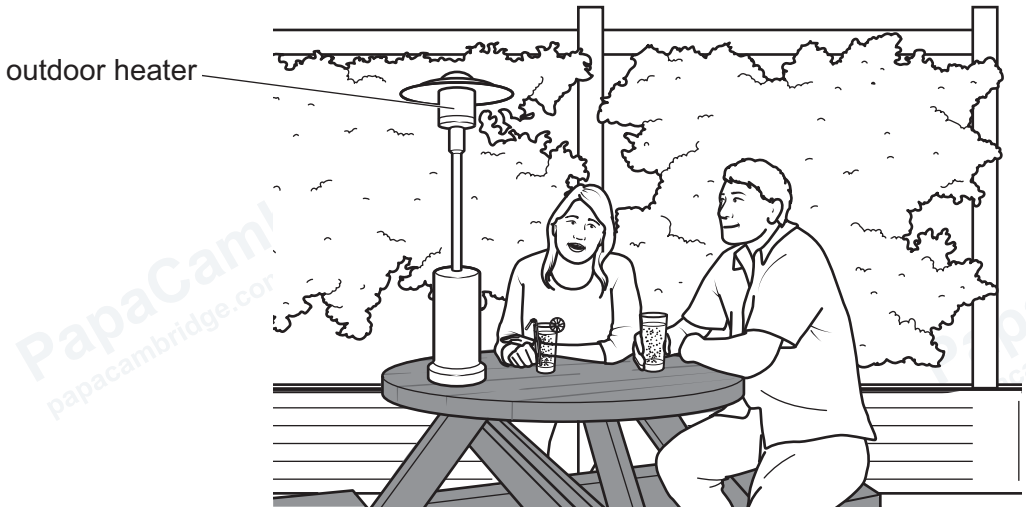


**Figure 4.1**

**(a)** State the method of thermal energy transfer that warms the people.

..... [1]

**(b)** **(i)** Complete the sentences about energy transfers that warm the table.

The heater transfers energy to the ..... store of the table. The temperature of the table increases. The rate of energy ..... by the table is greater than the rate of energy ..... by the table. [2]

**(ii)** One of the people puts a white cloth over the table. Explain why the white cloth causes the temperature of the table to decrease.

.....

..... [2]

**(c)** The heater has a power of 2.5 kW. The heater is switched on for 3 hours.

Calculate the energy, in kWh, transferred electrically by the heater.

energy = ..... kWh [2]

[Total: 7]

© Cambridge University Press & Assessment 2026 

DO NOT WRITE IN THIS MARGIN DO NOT WRITE IN THIS MARGIN DO NOT WRITE IN THIS MARGIN DO NOT WRITE IN THIS MARGIN DO NOT WRITE IN THIS MARGIN

GradeMax



DO NOT WRITE IN THIS MARGIN
DO NOT WRITE IN THIS MARGIN
DO NOT WRITE IN THIS MARGIN
DO NOT WRITE IN THIS MARGIN
DO NOT WRITE IN THIS MARGIN

**5** **(a)** Atmospheric pressure is $1.0 \times 10^5$ Pa. A volume of $1.02\,m^3$ of air at atmospheric pressure is pumped into a car tyre. The pressure of the air when it is inside the tyre is $2.6 \times 10^5$ Pa.

Calculate the volume of the air when it is in the car tyre.

volume = ..... $m^3$ [3]

**(b)** **(i)** Describe the structure of a gas in terms of the separation, arrangement and motion of particles.

separation .....

.....

arrangement .....

.....

motion .....

.....

[3]

**(ii)** Explain, in terms of particles, why the internal energy of the gas decreases when the gas is at a lower temperature.

.....

..... [2]

[Total: 8]

© Cambridge University Press & Assessment 2026

**6** Figure 6.1 is a full-scale drawing of an object O, a thin converging lens L and the image I of object O.

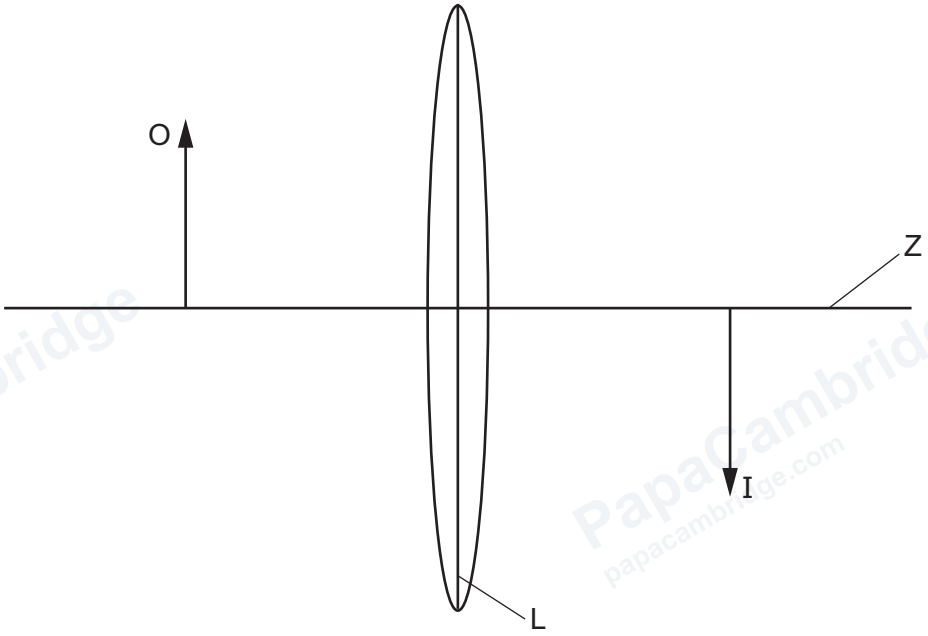


**Figure 6.1**

**(a) (i)** Identify Z.

..... [1]

**(ii)** Determine the focal length of the lens L. Show any working in the space provided or on Figure 6.1.

focal length = ..... cm [2]

**(iii)** The image in Figure 6.1 is inverted.

State **two** other characteristics of the image.

1 .....

2 .....

[2]

© Cambridge University Press & Assessment 2026


GradeMax

DO NOT WRITE IN THIS MARGIN

DO NOT WRITE IN THIS MARGIN

DO NOT WRITE IN THIS MARGIN

DO NOT WRITE IN THIS MARGIN

DO NOT WRITE IN THIS MARGIN

**(b)** Figure 6.2 shows a different converging lens with a focal length F.

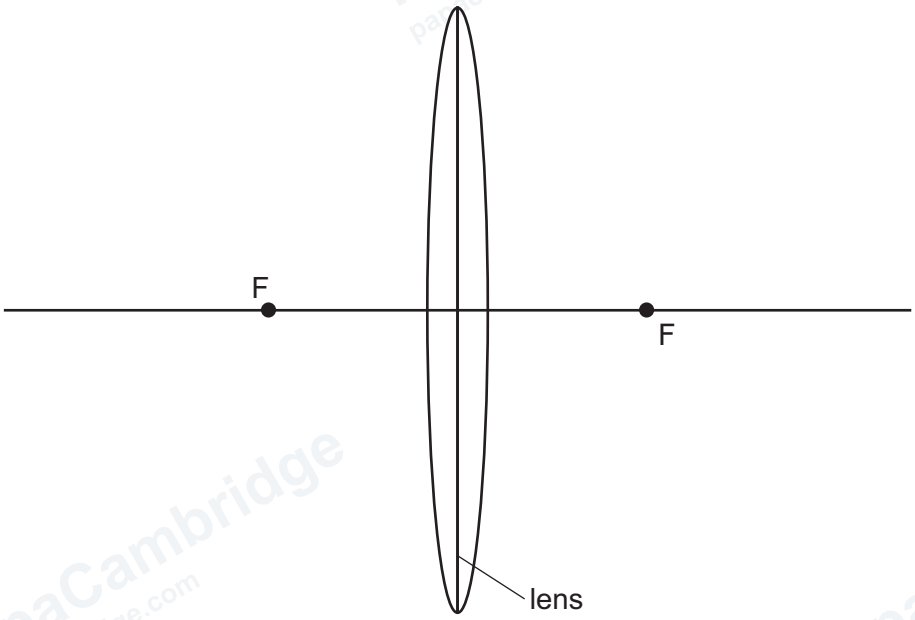


**Figure 6.2**

**(i)** The lens in Figure 6.2 is used as a magnifying glass.

Draw an X on Figure 6.2, to show a position for an object which produces a magnified image. [1]

**(ii)** Put a tick (✓) alongside the **two** statements which describe the position of the magnified image.

| | |
|---|---|
| on the opposite side of the lens to the object | |
| on the same side of the lens as the object | |
| the same distance from the lens as the object. | |
| closer to the lens than the object | |
| further away from the lens than the object | |

[1]

[Total: 7]

DO NOT WRITE IN THIS MARGIN

GradeMax



**7** Figure 7.1 shows two identical cells in series with a thermistor and a fixed resistor.

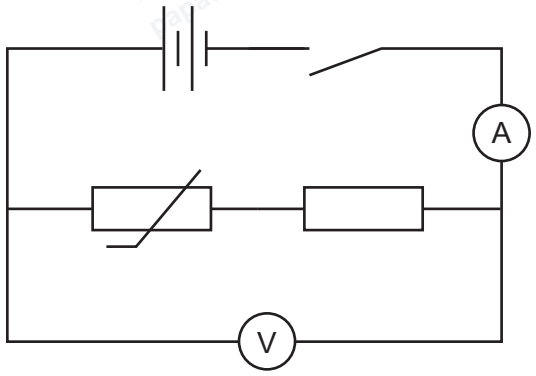


**Figure 7.1**

The switch is closed. The reading on the voltmeter is 9.0 V. The reading on the ammeter is 4.6 mA.

**(a)** Determine the e.m.f. of one cell. Give the unit.

e.m.f. = ..... unit ..... [2]

**(b)** Complete the sentence to define electric current.

Electric current is the amount of ..... passing a point

per unit ..... .

[1]

**(c)** The resistance of the fixed resistor is 480 Ω.

Calculate the resistance of the thermistor.

resistance = ..... Ω [3]

**(d)** The thermistor is placed in a beaker of ice. The temperature of the thermistor decreases. State how this change in temperature affects the readings on the voltmeter and ammeter.

voltmeter .....

ammeter .....

[1]

[Total: 7]

© Cambridge University Press & Assessment 2026 

DO NOT WRITE IN THIS MARGIN
DO NOT WRITE IN THIS MARGIN
DO NOT WRITE IN THIS MARGIN
DO NOT WRITE IN THIS MARGIN
DO NOT WRITE IN THIS MARGIN

GradeMax



DO NOT WRITE IN THIS MARGIN
DO NOT WRITE IN THIS MARGIN
DO NOT WRITE IN THIS MARGIN
DO NOT WRITE IN THIS MARGIN
DO NOT WRITE IN THIS MARGIN

**8** A transformer steps down high-voltage electricity. The transformer has 6200 turns on the primary coil and 43 turns on the secondary coil. The output voltage is 230 V.

**(a) (i)** Calculate the input voltage in the step-down transformer.

input voltage = ..... V [2]

**(ii)** A 2.2 kW kettle is connected to the secondary coil of the transformer.

Calculate the current in the primary coil of the step-down transformer. Assume the transformer is 100% efficient.

current = ..... A [3]

**(b)** A power station produces 1.3 GW of electricity. A transformer at the power station steps up the voltage before the electricity is transmitted. This reduces the power loss during transmission.

**(i)** State the equation for power loss in electricity transmission.

..... [1]

**(ii)** Explain how the step-up transformer reduces power losses during electricity transmission.

.....

.....

..... [2]

[Total: 8]

© Cambridge University Press & Assessment 2026

GradeMax



**9** Figure 9.1 shows a beam of $\alpha$-particles and $\gamma$-radiation entering an electric field between two charged metal plates P and Q.

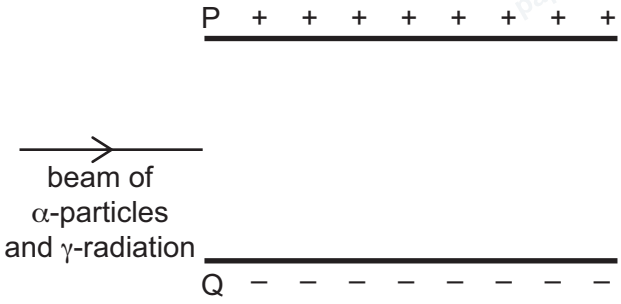


**Figure 9.1**

**(a)** On Figure 9.1, draw the path of:

1 the $\alpha$-particles inside the electric field. Label this line $\alpha$.

2 the $\gamma$-radiation inside the electric field. Label this line $\gamma$.

[3]

**(b)** A student places a sheet of paper in the path of the beam before it reaches the electric field. State how this affects the path of the $\alpha$-particles and $\gamma$-radiation inside the electric field.

$\alpha$-particles .....

$\gamma$-radiation .....

[2]

**(c)** The beam of $\alpha$-particles and $\gamma$-radiation in Figure 9.1 is replaced by a beam of $\beta$-particles.

State and explain the path of the $\beta$-particles in the electric field. Use ideas about electrostatic force in your answer.

statement .....

explanation .....

.....

[3]

[Total: 8]

© Cambridge University Press & Assessment 2026 

DO NOT WRITE IN THIS MARGIN

GradeMax



DO NOT WRITE IN THIS MARGIN
DO NOT WRITE IN THIS MARGIN
DO NOT WRITE IN THIS MARGIN
DO NOT WRITE IN THIS MARGIN
DO NOT WRITE IN THIS MARGIN

**10** **(a)** Planetary nebulae form as part of the life cycle of stars.

**(i)** Complete the sentence about a planetary nebula.

Stars expand when they run out of hydrogen to fuel nuclear reactions.

A ..... forms a planetary nebula. [1]

**(ii)** State what is at the centre of a planetary nebula.

..... [1]

**(b)** A planetary nebula emits blue light and red light at two specific wavelengths: $5.0 \times 10^{-7}$ m and $6.6 \times 10^{-7}$ m.

**(i)** Explain why the light with a wavelength of $5.0 \times 10^{-7}$ m is the blue light.

.....

..... [1]

**(ii)** The speed of light in a vacuum is $3.0 \times 10^{8}$ m/s.

Calculate the frequency of the blue light.

frequency = ..... Hz [2]

[Total: 5]

© Cambridge University Press & Assessment 2026

GradeMax



**11** The average orbital speed $v$ of an object in the Solar System is defined by the equation

$$v = \frac{2\pi r}{T}$$

**(a)** Define the terms $r$ and $T$ in this equation.

$r$ is .....

$T$ is .....

[2]

**(b)** The average orbital speed of Saturn is 9600 m / s.

**(i)** Explain why the orbital speed is an average value.

.....

.....

..... [2]

**(ii)** Saturn is $1.4 \times 10^{12}$ m from the Sun.

Show that one Saturn year is approximately equal to 30 Earth years.

[4]

[Total: 8]

Permission to reproduce items where third-party owned material protected by copyright is included has been sought and cleared where possible. Every reasonable effort has been made by the publisher (Cambridge University Press & Assessment) to trace copyright holders, but if any items requiring clearance have unwittingly been included, the publisher will be pleased to make amends at the earliest possible opportunity.

To avoid the issue of disclosure of answer-related information to candidates, all copyright acknowledgements are reproduced online in our Copyright Acknowledgements Booklet. This is produced for each series of examinations and is freely available to download at www.cambridgeinternational.org after the live examination series.

Cambridge International Education is the name of our awarding body and a part of Cambridge University Press & Assessment, which is a department of the University of Cambridge.

© Cambridge University Press & Assessment 2026 

DO NOT WRITE IN THIS MARGIN DO NOT WRITE IN THIS MARGIN DO NOT WRITE IN THIS MARGIN DO NOT WRITE IN THIS MARGIN DO NOT WRITE IN THIS MARGIN