GradeMax

* 0000800000001 * DFD

CAMBRIDGE
International Education

# Cambridge IGCSE™

CANDIDATE NAME

CENTRE NUMBER

CANDIDATE NUMBER

* 7 3 9 7 0 0 1 3 2 4 *

**PHYSICS** **0625/52**

Paper 5 Practical Test **February/March 2026**

**1 hour 15 minutes**

You must answer on the question paper.

You will need: The materials and apparatus listed in the confidential instructions

**INSTRUCTIONS**

- Answer **all** questions.
- Use a black or dark blue pen. You may use an HB pencil for any diagrams or graphs.
- Write your name, centre number and candidate number in the boxes at the top of the page.
- Write your answer to each question in the space provided.
- Do **not** use an erasable pen. Do **not** use correction fluid or tape.
- Do **not** write on any bar codes.
- You may use a calculator.
- You should show all your working and use appropriate units.

**INFORMATION**

- The total mark for this paper is 40.
- The number of marks for each question or part question is shown in brackets [ ].

| For Examiner's Use | |
|---|---|
| 1 | |
| 2 | |
| 3 | |
| 4 | |
| Total | |

This document has **16** pages. Any blank pages are indicated.

DC (DE/TC) 363717/3
© Cambridge University Press & Assessment 2026

**[Turn over**

GradeMax



**1** In this experiment, you will determine the density of a glass ball.

**(a) (i)**
- Pour water into a measuring cylinder until it is approximately half full.
- Place the measuring cylinder of water on the top-pan balance.
- Record the combined mass $m_1$ of the measuring cylinder and water.

Give your answer to the nearest gram.

$m_1$ = ..... g [1]

**(ii)** Describe **one** technique for using a top-pan balance to measure the mass of the measuring cylinder and water to ensure an accurate reading.

.....

..... [1]

**(iii)** Measure the volume $V_1$ of water in the measuring cylinder.

$V_1$ = ..... $cm^3$ [1]

**(iv)** Describe **one** technique for using a measuring cylinder to measure the volume of the water to ensure an accurate reading.

.....

..... [1]

**(b)** Place five glass balls into the water in the measuring cylinder, ensuring no water splashes out.

**(i)** Measure the mass $m_2$ of the measuring cylinder, water and five glass balls.

$m_2$ = ..... g [1]

**(ii)** Calculate the mass $m$ of one glass ball.

$m$ = ..... g [1]

**(iii)** Measure the volume $V_2$ of the water and five glass balls.

$V_2$ = ..... $cm^3$ [1]

© Cambridge University Press & Assessment 2026 

DO NOT WRITE IN THIS MARGIN
DO NOT WRITE IN THIS MARGIN
DO NOT WRITE IN THIS MARGIN
DO NOT WRITE IN THIS MARGIN
DO NOT WRITE IN THIS MARGIN

GradeMax



**(iv)** Calculate the volume $V$ of one glass ball.

$V$ = ..... $cm^3$ [1]

**(v)** Calculate the density $\rho$ of a glass ball. Use your values from **1(b)(ii)** and **1(b)(iv)** and the equation shown.

$$\rho = \frac{m}{V}$$

$\rho$ = ..... $g/cm^3$ [1]

**(c)** Suggest **two** improvements that will help a student to determine a more accurate value for the volume of a glass ball.

1 .....

.....

2 .....

.....

[2]

[Total: 11]

DO NOT WRITE IN THIS MARGIN
DO NOT WRITE IN THIS MARGIN
DO NOT WRITE IN THIS MARGIN
DO NOT WRITE IN THIS MARGIN
DO NOT WRITE IN THIS MARGIN

**2** In this experiment, you will investigate the behaviour of a spring.

A clamp stand and spring have been set up for you. Refer to Figure 2.1.

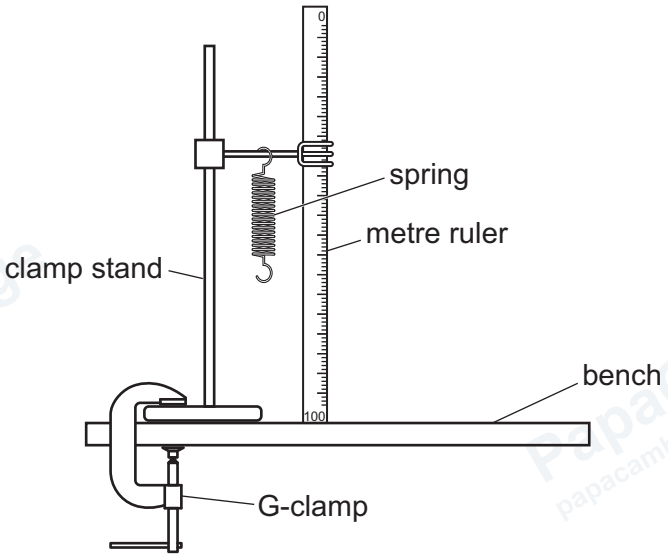


**Figure 2.1**

**(a) (i)** Measure the initial length $l_0$ of the spring with no load. Give your answer to the nearest mm.

Do **not** include the loops at the ends of the spring in your measurement.

$l_0$ ..... mm [1]

© Cambridge University Press & Assessment 2026


GradeMax

DO NOT WRITE IN THIS MARGIN

DO NOT WRITE IN THIS MARGIN

DO NOT WRITE IN THIS MARGIN

DO NOT WRITE IN THIS MARGIN

DO NOT WRITE IN THIS MARGIN

GradeMax



**(ii)** Draw a diagram of the spring and show clearly the length $l_0$.

The diagram does **not** need to be drawn to scale.

[1]

**(iii)** Describe **two** techniques that you use when measuring the length of the spring to ensure an accurate reading.

You may draw a diagram.

1 .....

.....

2 .....

.....

[2]

DO NOT WRITE IN THIS MARGIN
DO NOT WRITE IN THIS MARGIN
DO NOT WRITE IN THIS MARGIN
DO NOT WRITE IN THIS MARGIN
DO NOT WRITE IN THIS MARGIN

GradeMax



**(b)**
- Suspend a load $L$ = 1.0 N from the spring.
- Record the new length $l$ of the spring in Table 2.1.
- Calculate the extension $x$ of the spring using the equation $x = l - l_0$.
- Record the value of $x$ in Table 2.1.
- Repeat the procedure using loads $L$ = 2.0 N, 3.0 N, 4.0 N and 5.0 N.

**Table 2.1**

| $L$ / N | $l$ / mm | $x$ / mm |
|---|---|---|
| 1.0 | | |
| 2.0 | | |
| 3.0 | | |
| 4.0 | | |
| 5.0 | | |

[2]

DO NOT WRITE IN THIS MARGIN
DO NOT WRITE IN THIS MARGIN
DO NOT WRITE IN THIS MARGIN
DO NOT WRITE IN THIS MARGIN
DO NOT WRITE IN THIS MARGIN

© Cambridge University Press & Assessment 2026 

GradeMax



**(c) (i)** Plot a graph of $L$ / N ($y$-axis) against $x$ / mm ($x$-axis).

Start the axes from the origin (0, 0).

Draw a best-fit line.

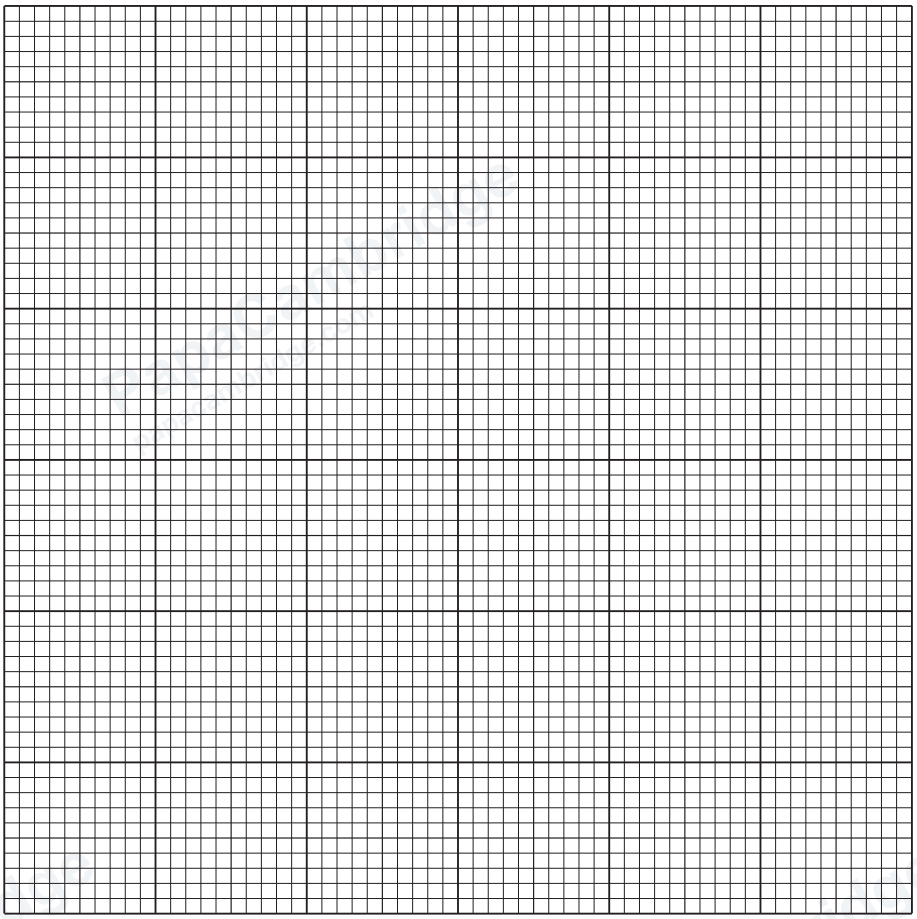

[4]

**(ii)** State and explain if your line shows $L$ and $x$ are directly proportional.

.....

.....

..... [1]

[Total: 11]

DO NOT WRITE IN THIS MARGIN
DO NOT WRITE IN THIS MARGIN
DO NOT WRITE IN THIS MARGIN
DO NOT WRITE IN THIS MARGIN
DO NOT WRITE IN THIS MARGIN

GradeMax



**3** In this experiment, you will investigate circuits containing different combinations of resistors.

**(a) (i)** Circuit 1 has been set up for you.

Refer to Figure 3.1.

Circuit 1.

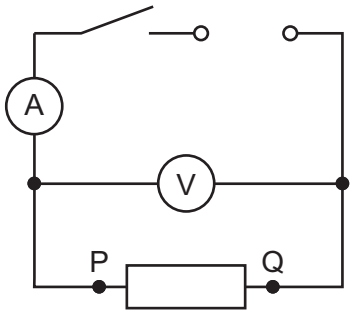


**Figure 3.1**

Circuit 1 contains one resistor of resistance X Ω.

Using circuit 1:

- Close the switch.
- Record in Table 3.1, the potential difference (p.d.) *V* across the resistor.
- Record in Table 3.1, the current *I* in the circuit.
- Open the switch.

Complete the table headings in Table 3.1 by inserting the missing units.

**Table 3.1**

| **circuit** | ***V*/ …** | ***I*/ …** | ***R*/ Ω** |
|---|---|---|---|
| 1 | | | |
| 2 | | | |
| 4 | | | |

[1]

DO NOT WRITE IN THIS MARGIN
DO NOT WRITE IN THIS MARGIN
DO NOT WRITE IN THIS MARGIN
DO NOT WRITE IN THIS MARGIN
DO NOT WRITE IN THIS MARGIN

© Cambridge University Press & Assessment 2026 

GradeMax



**(ii)** Disconnect the single resistor from P and Q.

Connect the resistor network Y to P and Q to form circuit 2.

Figure 3.2 shows the completed circuit 2.

Circuit 2.

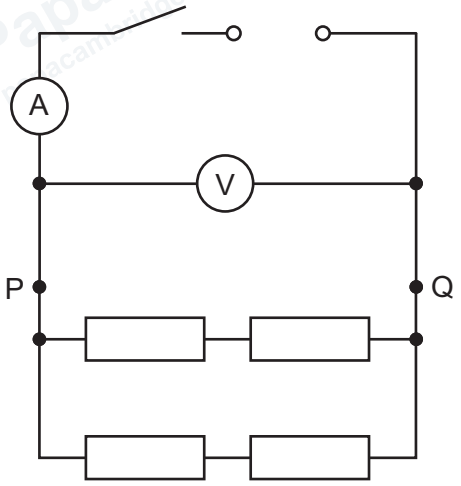


**Figure 3.2**

Circuit 2 contains four identical resistors each of resistance X Ω.

Using circuit 2:

- Close the switch.
- Measure, and record in Table 3.1, the potential difference (p.d.) *V* across the combination of 4 resistors.
- Measure, and record in Table 3.1, the current *I* in the circuit.
- Open the switch.

[1]

**(iii)** Calculate, and record in Table 3.1, the resistance *R* of circuits 1 and 2.

Use your readings from Table 3.1 and the equation shown.

$$R = \frac{V}{I}$$

[2]

DO NOT WRITE IN THIS MARGIN
DO NOT WRITE IN THIS MARGIN
DO NOT WRITE IN THIS MARGIN
DO NOT WRITE IN THIS MARGIN
DO NOT WRITE IN THIS MARGIN

© Cambridge University Press & Assessment 2026 

GradeMax



**(iv)** Theory states that the resistance of circuit 1 and circuit 2 are the same.

State whether your results support this statement. Justify your statement by reference to values from your results.

statement .....

justification .....

.....

[2]

**(v)** Figure 3.3 shows circuit 3. Do **not** build circuit 3.

Circuit 3.

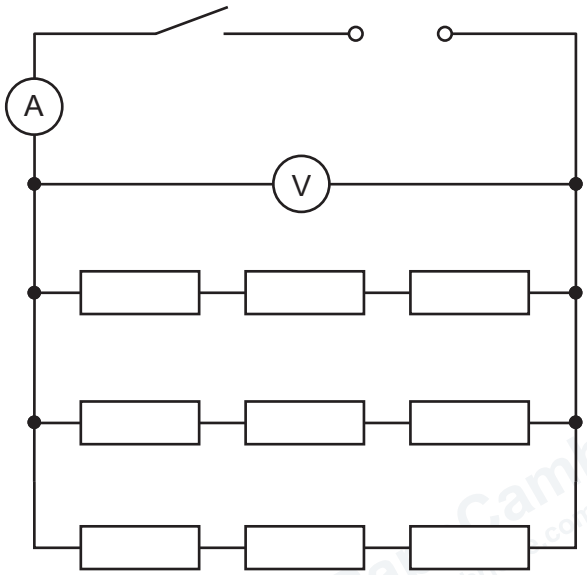


**Figure 3.3**

Circuit 3 has **not** been set up for you.

Circuit 3 contains nine identical resistors each of resistance X Ω.

Predict the resistance of this combination of resistors.

..... Ω [1]

DO NOT WRITE IN THIS MARGIN
DO NOT WRITE IN THIS MARGIN
DO NOT WRITE IN THIS MARGIN
DO NOT WRITE IN THIS MARGIN
DO NOT WRITE IN THIS MARGIN

© Cambridge University Press & Assessment 2026 

GradeMax



**(b) (i)** Disconnect the resistor network Y from P and Q.

Connect the resistor network Z to P and Q to form circuit 4.

Complete Figure 3.4 to show circuit 4.

Circuit 4.

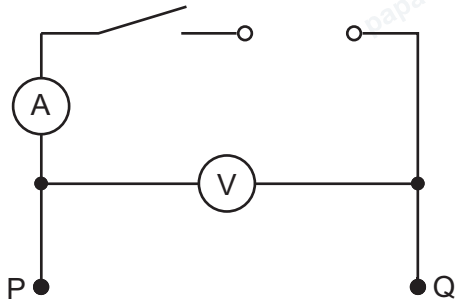


**Figure 3.4**

[2]

**(ii)**
- Close the switch.
- Measure, and record in Table 3.1, the potential difference (p.d.) $V$ on the voltmeter.
- Measure, and record in Table 3.1, the current $I$ in the circuit.
- Open the switch.

[1]

**(c)** Suggest why the switch is opened after readings are taken.

.....

..... [1]

[Total: 11]

DO NOT WRITE IN THIS MARGIN
DO NOT WRITE IN THIS MARGIN
DO NOT WRITE IN THIS MARGIN
DO NOT WRITE IN THIS MARGIN
DO NOT WRITE IN THIS MARGIN

GradeMax



**4** A student investigates the rate of cooling of hot water in a container which has a lid.

Plan an experiment which enables the student to investigate the effect of different starting temperatures on the rate of cooling.

The apparatus available includes:

- a beaker
- a measuring cylinder
- a supply of hot water
- a lid

You are **not** required to do this investigation.

In your plan:

- state any additional apparatus required
- explain briefly how to do the investigation
- state the key variables to keep constant
- draw a table, or tables, with column headings, to show how to display your readings (you are **not** required to enter any readings in the table)
- explain how to use your readings to reach a conclusion.

DO NOT WRITE IN THIS MARGIN
DO NOT WRITE IN THIS MARGIN
DO NOT WRITE IN THIS MARGIN
DO NOT WRITE IN THIS MARGIN
DO NOT WRITE IN THIS MARGIN

© Cambridge University Press & Assessment 2026 

GradeMax



DO NOT WRITE IN THIS MARGIN
DO NOT WRITE IN THIS MARGIN
DO NOT WRITE IN THIS MARGIN
DO NOT WRITE IN THIS MARGIN
DO NOT WRITE IN THIS MARGIN

.....

.....

.....

.....

.....

.....

.....

.....

.....

.....

.....

.....

.....

.....

.....

.....

.....

..... [7]

PapaCambridge papacambridge.com

GradeMax



**BLANK PAGE**

DO NOT WRITE IN THIS MARGIN
DO NOT WRITE IN THIS MARGIN
DO NOT WRITE IN THIS MARGIN
DO NOT WRITE IN THIS MARGIN
DO NOT WRITE IN THIS MARGIN

© Cambridge University Press & Assessment 2026 

GradeMax





**BLANK PAGE**

DO NOT WRITE IN THIS MARGIN
DO NOT WRITE IN THIS MARGIN
DO NOT WRITE IN THIS MARGIN
DO NOT WRITE IN THIS MARGIN
DO NOT WRITE IN THIS MARGIN

© Cambridge University Press & Assessment 2026 

GradeMax



**BLANK PAGE**

DO NOT WRITE IN THIS MARGIN
DO NOT WRITE IN THIS MARGIN
DO NOT WRITE IN THIS MARGIN
DO NOT WRITE IN THIS MARGIN
DO NOT WRITE IN THIS MARGIN

Permission to reproduce items where third-party owned material protected by copyright is included has been sought and cleared where possible. Every reasonable effort has been made by the publisher (Cambridge University Press & Assessment) to trace copyright holders, but if any items requiring clearance have unwittingly been included, the publisher will be pleased to make amends at the earliest possible opportunity.

To avoid the issue of disclosure of answer-related information to candidates, all copyright acknowledgements are reproduced online in our Copyright Acknowledgements Booklet. This is produced for each series of examinations and is freely available to download at www.cambridgeinternational.org after the live examination series.

Cambridge International Education is the name of our awarding body and a part of Cambridge University Press & Assessment, which is a department of the University of Cambridge.

© Cambridge University Press & Assessment 2026 