GradeMax

* 0000800000001 * DFD

CAMBRIDGE
International Education

Cambridge IGCSE™

CANDIDATE NAME

CENTRE NUMBER

CANDIDATE NUMBER

* 1 9 5 2 3 4 4 9 9 1 *

PHYSICS **0625/62**

Paper 6 Alternative to Practical **February/March 2026**

1 hour

You must answer on the question paper.

No additional materials are needed.

INSTRUCTIONS

- Answer **all** questions.
- Use a black or dark blue pen. You may use an HB pencil for any diagrams or graphs.
- Write your name, centre number and candidate number in the boxes at the top of the page.
- Write your answer to each question in the space provided.
- Do **not** use an erasable pen. Do **not** use correction fluid or tape.
- Do **not** write on any bar codes.
- You may use a calculator.
- You should show all your working and use appropriate units.

INFORMATION

- The total mark for this paper is 40.
- The number of marks for each question or part question is shown in brackets [ ].

This document has **16** pages. Any blank pages are indicated.

DC (SL/CT) 363718/4
© Cambridge University Press & Assessment 2026

[Turn over

GradeMax

1 A student determines the density of a glass ball.

(a) The student:

- pours water into a measuring cylinder until it is approximately half full
- places the measuring cylinder of water on a top-pan balance
- records the combined mass m_1 of the measuring cylinder and water.

m_1 = 125.6 g

(i) Describe **one** technique for using a top-pan balance to measure the mass of the measuring cylinder and water to ensure an accurate reading.

.....

..... [1]

(ii) Figure 1.1 shows the water level in the measuring cylinder.

Record the volume V_1 of water in the measuring cylinder.

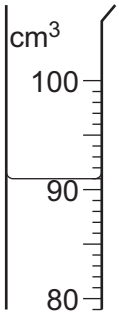

Figure 1.1

V_1 = ... cm^3 [1]

(iii) Describe **two** techniques that the student uses when measuring the volume of the water to ensure an accurate reading.

1 .....

.....

2 .....

.....

[2]

DO NOT WRITE IN THIS MARGIN

© Cambridge University Press & Assessment 2026

GradeMax

(b) The student places four glass balls into the water in the measuring cylinder, ensuring no water splashes out.

The student records the mass m_2 of the measuring cylinder, water and 4 glass balls.

m_2 = 132.8 g

(i) Calculate the mass m of one glass ball.

m = ... g [1]

(ii) The student records the volume V_2 of the water and four glass balls.

V_2 = 94 cm^3

Calculate the volume V of one glass ball.

V = ... cm^3 [1]

(iii) Calculate the density ρ of a glass ball. Use your values from **1(b)(i)** and **1(b)(ii)** and give the unit. Use the equation shown.

$$\rho = \frac{m}{V}$$

ρ = ... unit ..... [2]

(c) Suggest **two** improvements that will help a student to determine a more accurate value for the volume of a glass ball.

1 .....

.....

2 .....

.....

[2]

[Total: 10]

© Cambridge University Press & Assessment 2026

DO NOT WRITE IN THIS MARGIN
DO NOT WRITE IN THIS MARGIN
DO NOT WRITE IN THIS MARGIN
DO NOT WRITE IN THIS MARGIN
DO NOT WRITE IN THIS MARGIN

GradeMax

BLANK PAGE

DO NOT WRITE IN THIS MARGIN
DO NOT WRITE IN THIS MARGIN
DO NOT WRITE IN THIS MARGIN
DO NOT WRITE IN THIS MARGIN
DO NOT WRITE IN THIS MARGIN

© Cambridge University Press & Assessment 2026

GradeMax

2 A student investigates the behaviour of a spring.

Refer to Figure 2.1.

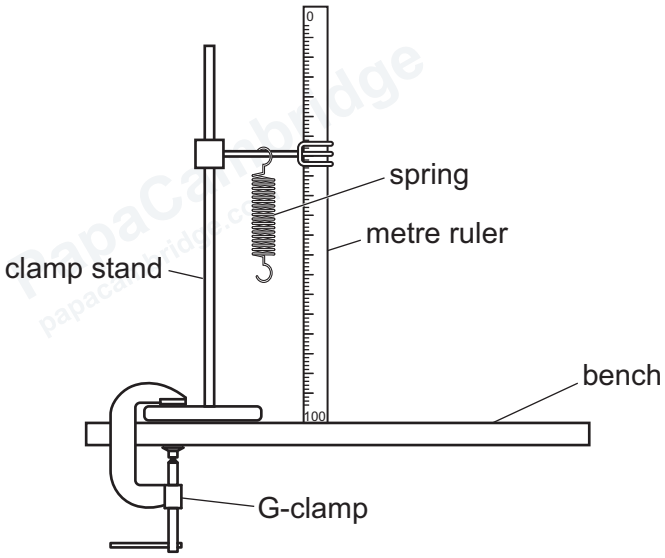

Figure 2.1

(a) (i) Describe **two** techniques the student uses when measuring the length of the spring to ensure an accurate reading. You may draw a diagram.

1 .....

.....

2 .....

.....

[2]

DO NOT WRITE IN THIS MARGIN
DO NOT WRITE IN THIS MARGIN
DO NOT WRITE IN THIS MARGIN
DO NOT WRITE IN THIS MARGIN
DO NOT WRITE IN THIS MARGIN

© Cambridge University Press & Assessment 2026

(ii) Using Figure 2.2 record the initial length l_0 of the spring with no load.

Do **not** include the loops at the ends of the spring in your measurement.

Show clearly on Figure 2.2 how you made your measurement.

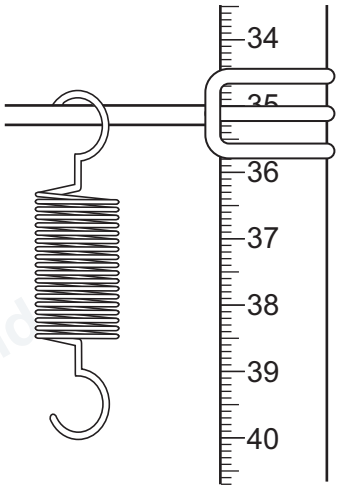

Figure 2.2

l_0 ..... mm [2]

(b) The student:

- suspends a load *L* = 1.0 N from the spring
- records the new length l of the spring in Table 2.1
- calculates the extension *x* of the spring using the equation $x = l - l_0$
- records the value of *x* in Table 2.1
- repeats the procedure using loads *L* = 2.0 N, 3.0 N, 4.0 N and 5.0 N.

Complete Table 2.1.

Table 2.1

***L*/N**	***l*/mm**	***x*/mm**
1.0	42	
2.0	61	
3.0	82	
4.0	107	
5.0	125	

[2]

© Cambridge University Press & Assessment 2026

GradeMax

DO NOT WRITE IN THIS MARGIN
DO NOT WRITE IN THIS MARGIN
DO NOT WRITE IN THIS MARGIN
DO NOT WRITE IN THIS MARGIN
DO NOT WRITE IN THIS MARGIN

GradeMax

(c) (i) Plot a graph of L / N (y-axis) against x / mm (x-axis).

Start the axes from the origin (0, 0)

Draw the best-fit line.

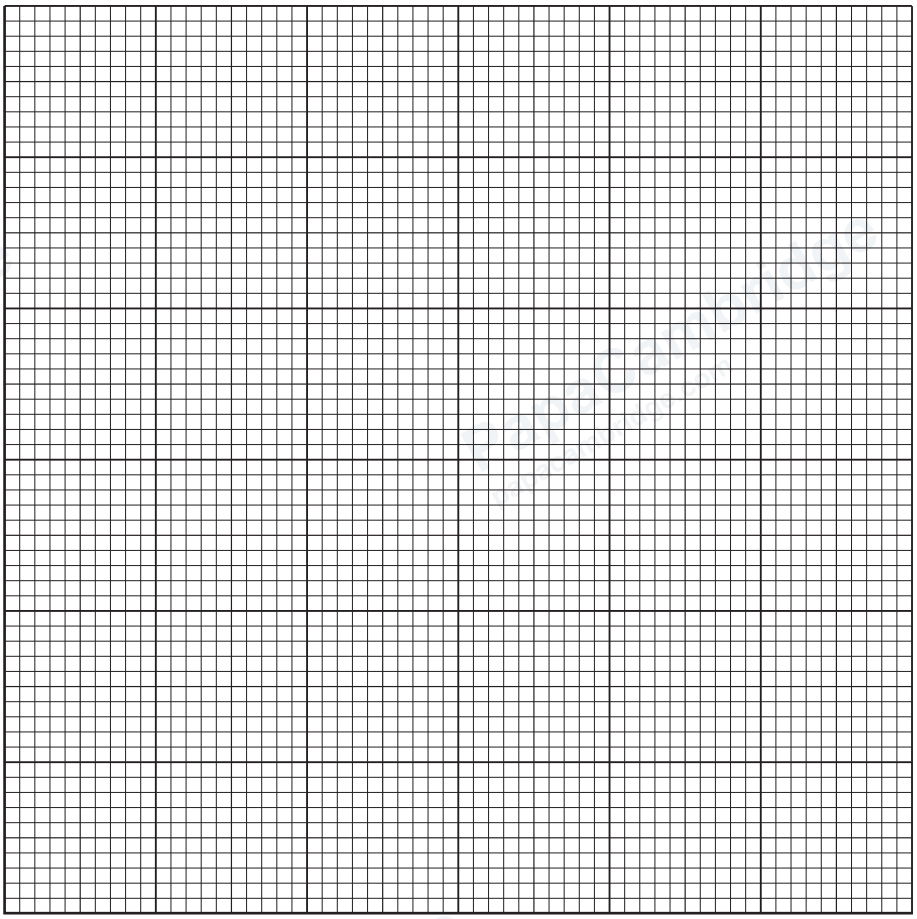

[4]

(ii) State and explain if your line shows L and x are directly proportional.

.....

.....

..... [1]

[Total: 11]

DO NOT WRITE IN THIS MARGIN
DO NOT WRITE IN THIS MARGIN
DO NOT WRITE IN THIS MARGIN
DO NOT WRITE IN THIS MARGIN
DO NOT WRITE IN THIS MARGIN

3 A student investigates circuits containing different combinations of resistors.

(a) (i) Figure 3.1 shows circuit 1.

Circuit 1.

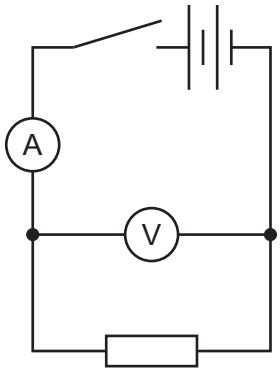

Figure 3.1

Circuit 1 contains one resistor of resistance X Ω.

The student closes the switch and measures the potential difference (p.d.) and current.

Record, in Table 3.1, the voltmeter and ammeter readings shown in Figure 3.2 for circuit 1.

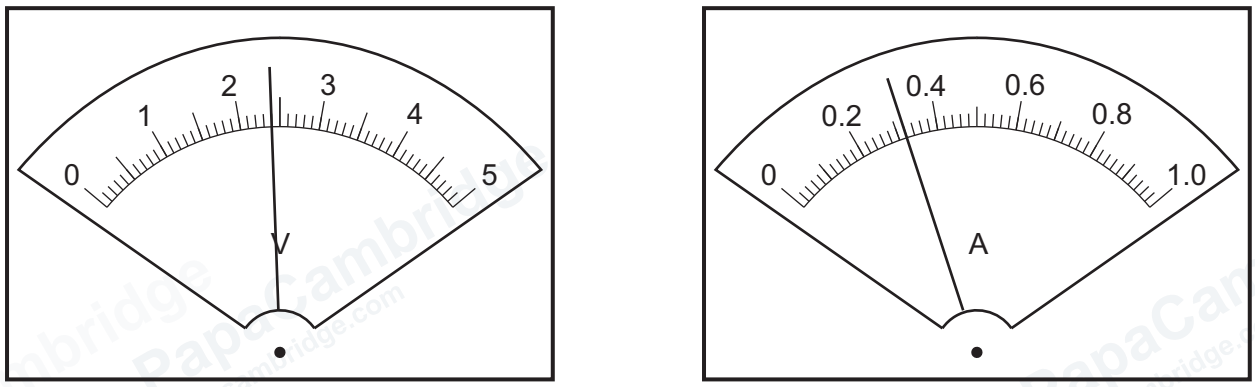

Figure 3.2

Table 3.1

circuit	V/V	I/A	R/Ω
1			
2			

[1]

© Cambridge University Press & Assessment 2026

GradeMax

DO NOT WRITE IN THIS MARGIN
DO NOT WRITE IN THIS MARGIN
DO NOT WRITE IN THIS MARGIN
DO NOT WRITE IN THIS MARGIN
DO NOT WRITE IN THIS MARGIN

GradeMax

(ii) Figure 3.3 shows circuit 2.

Circuit 2.

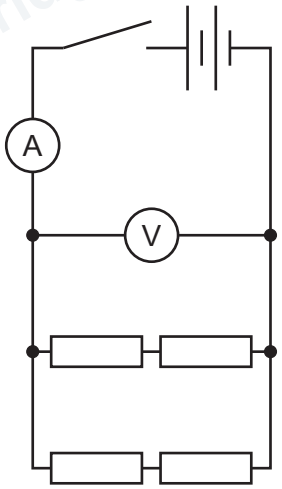

Figure 3.3

Circuit 2 contains four identical resistors each of resistance X Ω.

The student closes the switch and measures the potential difference (p.d.) and current.

Record, in Table 3.1, the voltmeter and ammeter readings shown in Figure 3.4 for circuit 2.

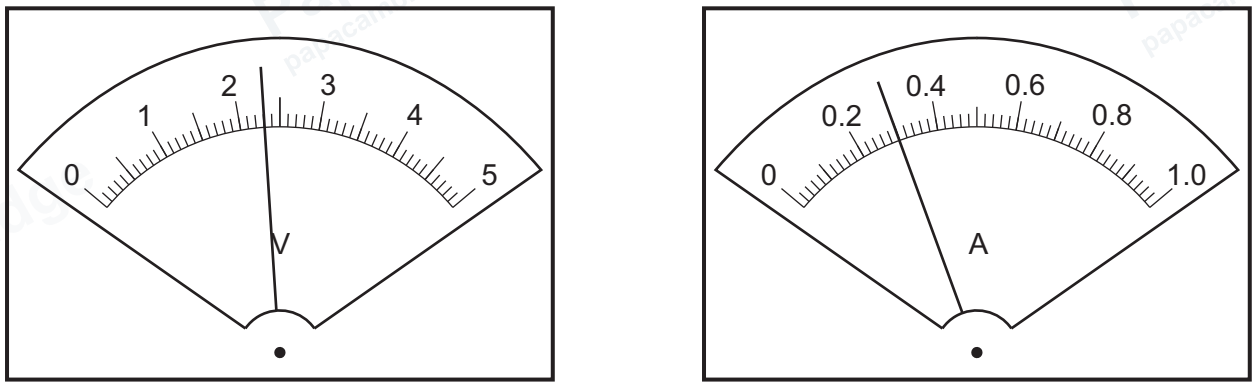

Figure 3.4

[1]

DO NOT WRITE IN THIS MARGIN
DO NOT WRITE IN THIS MARGIN
DO NOT WRITE IN THIS MARGIN
DO NOT WRITE IN THIS MARGIN
DO NOT WRITE IN THIS MARGIN

GradeMax

(iii) Calculate, and record in Table 3.1, the resistance of each circuit. Give your answers to 2 significant figures.

Use your readings from Table 3.1 and the equation shown.

$$R = \frac{V}{I}$$

[3]

(iv) Theory suggests that the resistance of circuit 1 and circuit 2 are the same.

State whether the results support this suggestion. Justify your statement by reference to values from your results.

statement .....

justification .....

.....

[2]

DO NOT WRITE IN THIS MARGIN
DO NOT WRITE IN THIS MARGIN
DO NOT WRITE IN THIS MARGIN
DO NOT WRITE IN THIS MARGIN
DO NOT WRITE IN THIS MARGIN

© Cambridge University Press & Assessment 2026

(v) Figure 3.5 shows circuit 3.

Circuit 3.

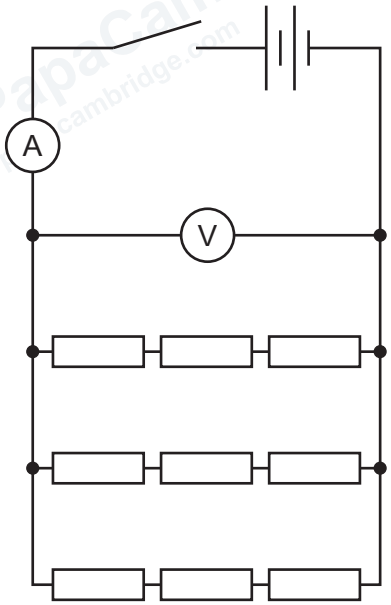

Figure 3.5

Circuit 3 contains nine identical resistors each of resistance X Ω.

Predict the resistance of this combination of resistors.

..... Ω [1]

(b) Another student performs the same experiment but uses a digital ammeter.

(i) State **one** advantage of using a digital meter.

.....

..... [1]

(ii) Figure 3.6 shows a digital ammeter display when it is connected in a circuit.



Figure 3.6

Record the value for the current shown in amperes.

..... A [1]

DO NOT WRITE IN THIS MARGIN
DO NOT WRITE IN THIS MARGIN
DO NOT WRITE IN THIS MARGIN
DO NOT WRITE IN THIS MARGIN
DO NOT WRITE IN THIS MARGIN

GradeMax

(c) Suggest **two** reasons why the switch is opened after readings are taken.

1 .....

.....

2 .....

.....

[2]

[Total: 12]

DO NOT WRITE IN THIS MARGIN
DO NOT WRITE IN THIS MARGIN
DO NOT WRITE IN THIS MARGIN
DO NOT WRITE IN THIS MARGIN
DO NOT WRITE IN THIS MARGIN

© Cambridge University Press & Assessment 2026

GradeMax

DO NOT WRITE IN THIS MARGIN
DO NOT WRITE IN THIS MARGIN
DO NOT WRITE IN THIS MARGIN
DO NOT WRITE IN THIS MARGIN
DO NOT WRITE IN THIS MARGIN

Turn over

PapaCambridge papacambridge.com

GradeMax

4 A student investigates the rate of cooling of hot water in a container which has a lid.

Plan an experiment which enables the student to investigate the effect of different starting temperatures on the rate of cooling.

The apparatus available includes:

- a beaker
- a measuring cylinder
- a supply of hot water
- a lid

In your plan:

- state any additional apparatus required
- explain briefly how to do the investigation
- state the key variables to keep constant
- draw a table, or tables, with column headings, to show how to display your readings (you are **not** required to enter any readings in the table)
- explain how to use your readings to reach a conclusion.

DO NOT WRITE IN THIS MARGIN
DO NOT WRITE IN THIS MARGIN
DO NOT WRITE IN THIS MARGIN
DO NOT WRITE IN THIS MARGIN
DO NOT WRITE IN THIS MARGIN

© Cambridge University Press & Assessment 2026

GradeMax

DO NOT WRITE IN THIS MARGIN
DO NOT WRITE IN THIS MARGIN
DO NOT WRITE IN THIS MARGIN
DO NOT WRITE IN THIS MARGIN
DO NOT WRITE IN THIS MARGIN

.....

.....

.....

.....

.....

.....

.....

.....

.....

.....

.....

.....

.....

.....

.....

.....

.....

..... [7]

PapaCambridge papacambridge.com

GradeMax

BLANK PAGE

DO NOT WRITE IN THIS MARGIN
DO NOT WRITE IN THIS MARGIN
DO NOT WRITE IN THIS MARGIN
DO NOT WRITE IN THIS MARGIN
DO NOT WRITE IN THIS MARGIN

Permission to reproduce items where third-party owned material protected by copyright is included has been sought and cleared where possible. Every reasonable effort has been made by the publisher (Cambridge University Press & Assessment) to trace copyright holders, but if any items requiring clearance have unwittingly been included, the publisher will be pleased to make amends at the earliest possible opportunity.

To avoid the issue of disclosure of answer-related information to candidates, all copyright acknowledgements are reproduced online in our Copyright Acknowledgements Booklet. This is produced for each series of examinations and is freely available to download at www.cambridgeinternational.org after the live examination series.

Cambridge International Education is the name of our awarding body and a part of Cambridge University Press & Assessment, which is a department of the University of Cambridge.

© Cambridge University Press & Assessment 2026