GradeMax

* 0000800000001 * DFD

CAMBRIDGE
International Education

Cambridge IGCSE™

CANDIDATE NAME

CENTRE NUMBER

CANDIDATE NUMBER

* 4 7 4 6 6 7 8 6 2 4 *

PHYSICS **0625/32**

Paper 3 Theory (Core) **May/June 2026**

1 hour 15 minutes

You must answer on the question paper.

No additional materials are needed.

INSTRUCTIONS

- Answer **all** questions.
- Use a black or dark blue pen. You may use an HB pencil for any diagrams or graphs.
- Write your name, centre number and candidate number in the boxes at the top of the page.
- Write your answer to each question in the space provided.
- Do **not** use an erasable pen. Do **not** use correction fluid or tape.
- Do **not** write on any bar codes.
- You may use a calculator.
- You should show all your working and use appropriate units.
- Take the weight of 1.0 kg to be 9.8 N (acceleration of free fall = 9.8 m / s^2).

INFORMATION

- The total mark for this paper is 80.
- The number of marks for each question or part question is shown in brackets [ ].

This document has **16** pages. Any blank pages are indicated.

DC (SL/SG) 356676/2
© Cambridge University Press & Assessment 2026

[Turn over

GradeMax

1 **(a)** Figure 1.1 shows the speed–time graph for a student in a race.

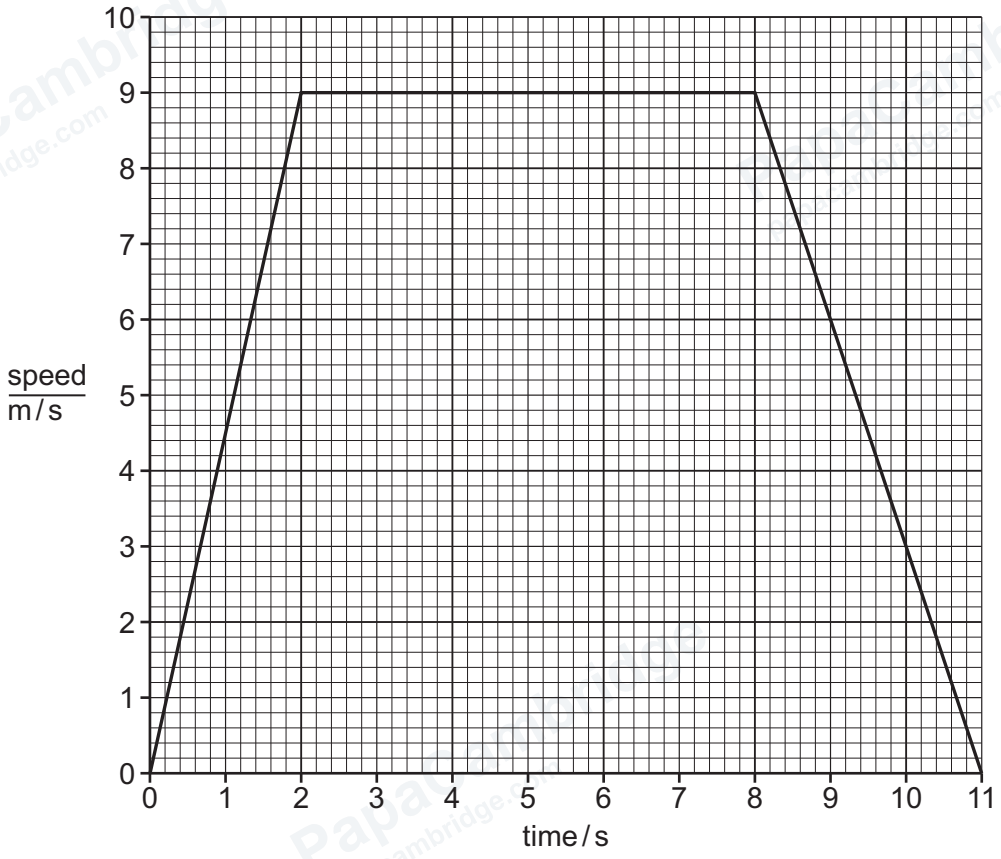

Figure 1.1

(i) Determine the speed of the student at time = 1.0 s.

speed = ... m/s [1]

(ii) Describe the speed of the student between:

- time = 2.0 s and time = 8.0 s .....
- time = 8.0 s and time = 11 s .....

[2]

(iii) Calculate the distance travelled by the student between time = 2.0 s and time = 8.0 s.

distance = ... m [3]

© Cambridge University Press & Assessment 2026

DO NOT WRITE IN THIS MARGIN
DO NOT WRITE IN THIS MARGIN
DO NOT WRITE IN THIS MARGIN
DO NOT WRITE IN THIS MARGIN
DO NOT WRITE IN THIS MARGIN

GradeMax

(b) In a different race, the student runs a distance of 400 m in a time of 2.0 minutes.

Calculate the average speed of the student. Give your answer in m/s.

average speed = ... m/s [4]

[Total: 10]

DO NOT WRITE IN THIS MARGIN
DO NOT WRITE IN THIS MARGIN
DO NOT WRITE IN THIS MARGIN
DO NOT WRITE IN THIS MARGIN
DO NOT WRITE IN THIS MARGIN

GradeMax

2 **(a)** A machine lifts a block of ice as shown in Figure 2.1.

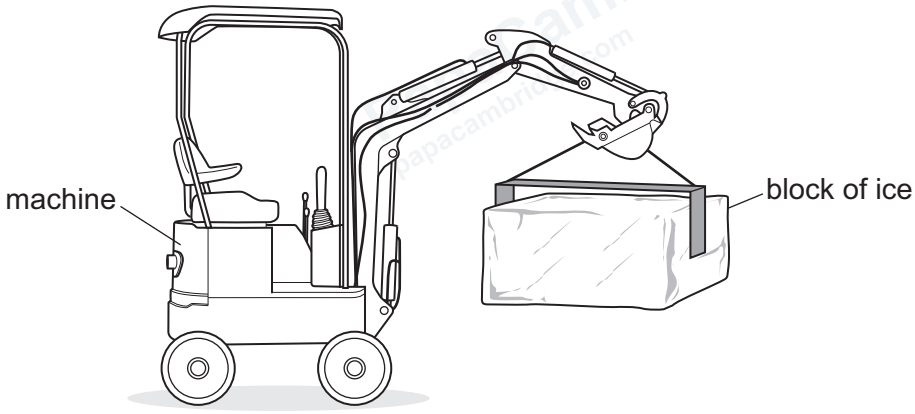

Figure 2.1

The weight of the block of ice is 650 N.

(i) The machine lifts the block of ice a vertical height of 1.2 m.

Calculate the work done on the block of ice. Include the unit.

work done = ... unit ..... [4]

(ii) Calculate the mass of the block of ice.

mass = ... kg [3]

DO NOT WRITE IN THIS MARGIN
DO NOT WRITE IN THIS MARGIN
DO NOT WRITE IN THIS MARGIN
DO NOT WRITE IN THIS MARGIN
DO NOT WRITE IN THIS MARGIN

© Cambridge University Press & Assessment 2026

GradeMax

(b) Another block of ice is lying on the ground, as shown in Figure 2.2.

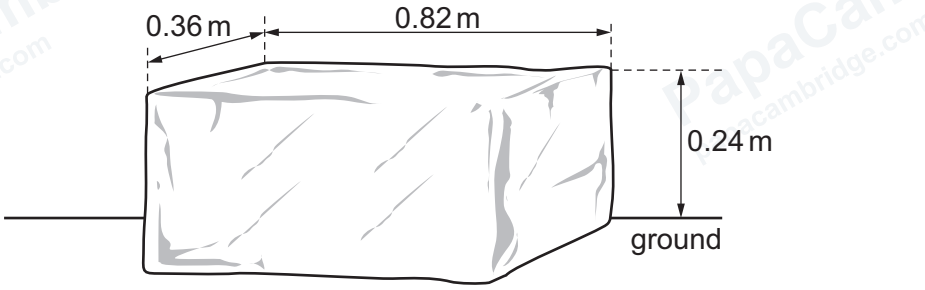

NOT TO SCALE

Figure 2.2

The weight of the block of ice is 650 N.

Calculate the pressure on the ground caused by the block of ice in the position shown in Figure 2.2.

pressure = ... N/m^2 [4]

[Total: 11]

DO NOT WRITE IN THIS MARGIN
DO NOT WRITE IN THIS MARGIN
DO NOT WRITE IN THIS MARGIN
DO NOT WRITE IN THIS MARGIN
DO NOT WRITE IN THIS MARGIN

GradeMax

3 A scientist determines the density of a pebble.

(a) The scientist measures the mass of the pebble.

State the name of a suitable instrument for measuring the mass of a pebble.

..... [1]

(b) The scientist measures the volume of the pebble.

The scientist has a measuring cylinder, a beaker containing water and a displacement can, as shown in Figure 3.1.

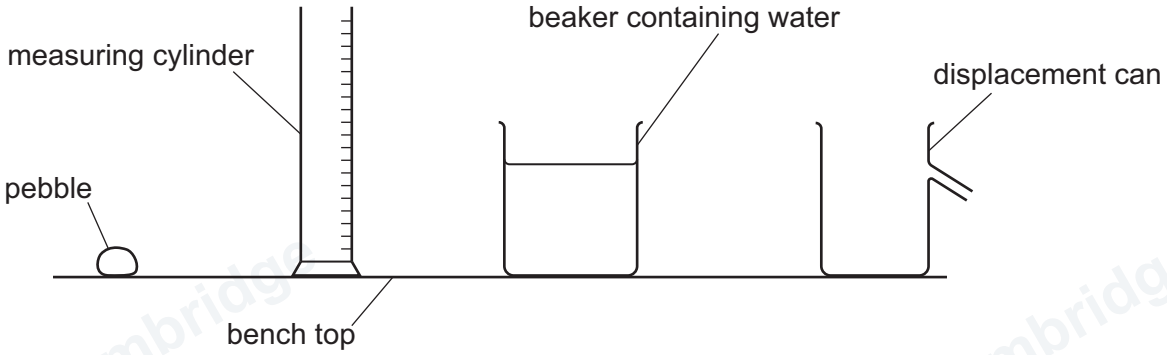

Figure 3.1

Describe how to determine the volume of the pebble, using any of the equipment in Figure 3.1.

.....

.....

.....

.....

.....

..... [4]

(c) The scientist's measurements are shown.

mass of pebble = 120 g
volume of pebble = 52 cm^3

Calculate the density of the pebble.

density of the pebble = ... g/cm^3 [3]

[Total: 8]

© Cambridge University Press & Assessment 2026

DO NOT WRITE IN THIS MARGIN
DO NOT WRITE IN THIS MARGIN
DO NOT WRITE IN THIS MARGIN
DO NOT WRITE IN THIS MARGIN
DO NOT WRITE IN THIS MARGIN

GradeMax

4 **(a)** A hot furnace heats some solid metal until the metal becomes liquid.

(i) Name the process by which a solid becomes a liquid.

..... [1]

(ii) A craftsman pours the liquid metal into a mould, as shown in Figure 4.1. The metal cools until it is solid.

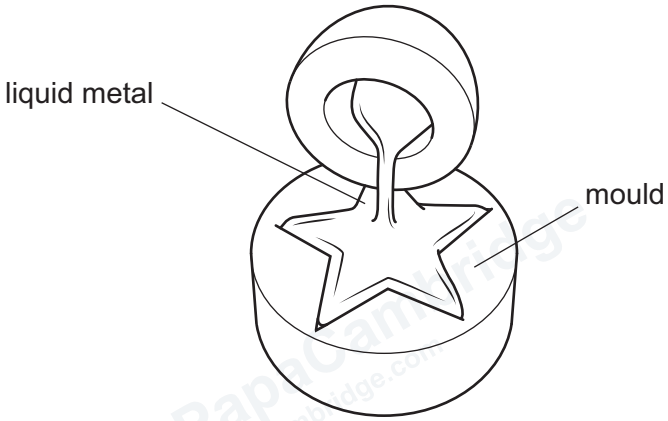

Figure 4.1

Describe the arrangement, separation and motion of the particles in a solid.

.....

.....

.....

.....

.....

..... [3]

(b) **(i)** State the term for the lowest possible temperature.

..... [1]

(ii) State the value, in °C, of the lowest possible temperature.

lowest possible temperature = ... °C [1]

[Total: 6]

DO NOT WRITE IN THIS MARGIN
DO NOT WRITE IN THIS MARGIN
DO NOT WRITE IN THIS MARGIN
DO NOT WRITE IN THIS MARGIN
DO NOT WRITE IN THIS MARGIN

© Cambridge University Press & Assessment 2026

GradeMax

5 Figure 5.1 shows equipment for heating water. All the equipment is on a roof. The storage tank and the copper pipe are filled with water. The Sun heats the water in the copper pipe.

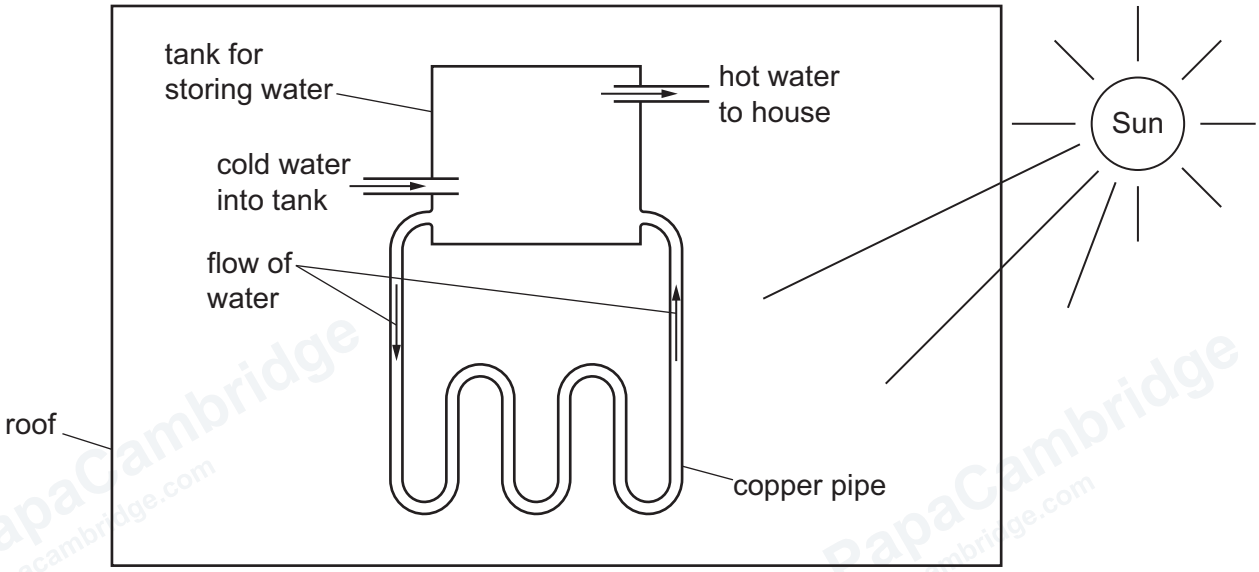

Figure 5.1

(a) (i) State the name of the process of thermal energy transfer from the Sun to the copper pipe.

..... [1]

(ii) The surface of the copper pipe is black.

Explain why the surface of the copper pipe is black.

.....

..... [2]

(iii) State the name of the process of thermal energy transfer through the copper.

..... [1]

(b) Explain why the hot water is at the top of the tank. Use your ideas about the density of water.

.....

.....

.....

..... [3]

[Total: 7]

© Cambridge University Press & Assessment 2026

DO NOT WRITE IN THIS MARGIN
DO NOT WRITE IN THIS MARGIN
DO NOT WRITE IN THIS MARGIN
DO NOT WRITE IN THIS MARGIN
DO NOT WRITE IN THIS MARGIN

GradeMax

6 The chart in Figure 6.1 shows the regions of the electromagnetic spectrum.
Two of the regions are **not** labelled.

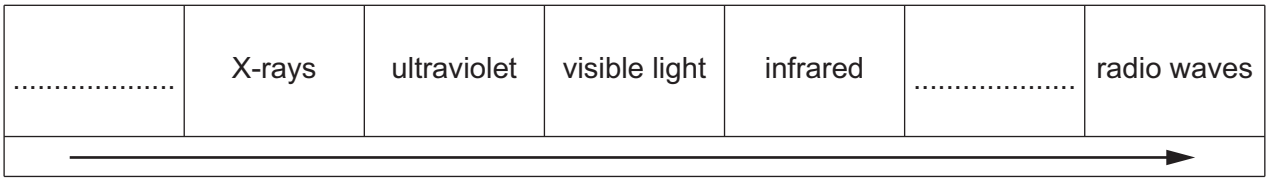

Figure 6.1

(a) Complete the labelling in Figure 6.1. [2]

(b) State the property of electromagnetic waves that increases in the direction of the arrow in Figure 6.1.

..... [1]

(c) Compare the speed of X-rays with the speed of radio waves in a vacuum.

Complete the sentence.

In a vacuum, the speed of X-rays is ..... [1]

(d) The different regions of the electromagnetic spectrum have different uses.

Describe **one** use for X-rays.

..... [1]

(e) Energy emitted by the Sun is mostly in **three** regions of the electromagnetic spectrum.

State the **three** regions.

1 .....

2 .....

3 .....

[2]

[Total: 7]

DO NOT WRITE IN THIS MARGIN

GradeMax

7 **(a)** Figure 7.1 shows a ray of light striking a plane mirror.

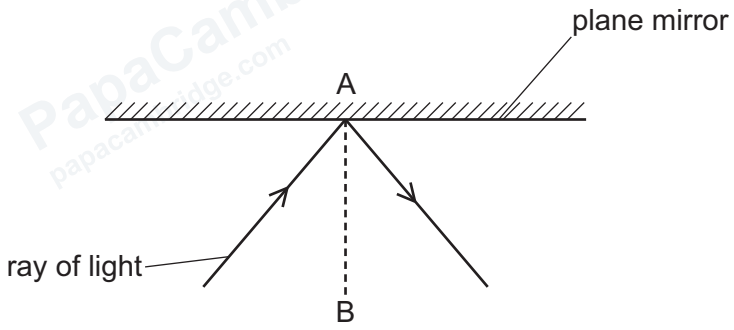

Figure 7.1

(i) State the name of the dashed line AB in Figure 7.1.

..... [1]

(ii) On Figure 7.1, indicate the angle of incidence by writing an X. [1]

(iii) State the law of reflection.

.....

..... [1]

(iv) A child places a toy in front of a plane mirror.

State **three** characteristics of the image formed by the plane mirror.

1 .....

2 .....

3 .....

[2]

DO NOT WRITE IN THIS MARGIN
DO NOT WRITE IN THIS MARGIN
DO NOT WRITE IN THIS MARGIN
DO NOT WRITE IN THIS MARGIN
DO NOT WRITE IN THIS MARGIN

© Cambridge University Press & Assessment 2026

GradeMax

(b) An object O is close to a converging lens.

Figure 7.2 shows a ray of light from the object passing through the converging lens.

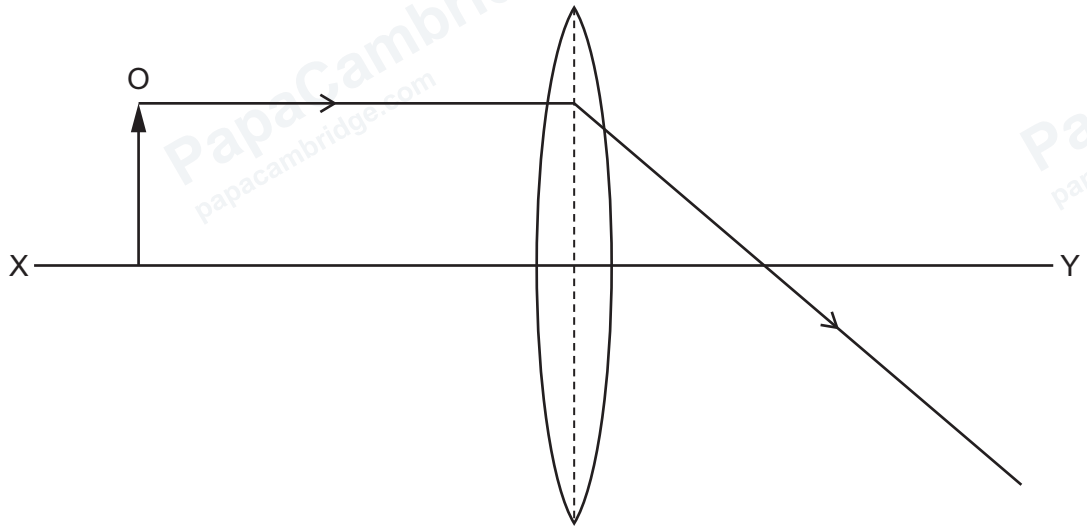

Figure 7.2

(i) State the name of the line labelled XY.

..... [1]

(ii) On Figure 7.2, draw another ray from the top of O and continue the ray until it crosses the path of the ray in Figure 7.2. [1]

(iii) The converging lens forms an image of object O.

On Figure 7.2, draw an arrow to represent the image of O and label it I. [1]

(iv) On Figure 7.2, indicate **one** principal focus for the converging lens. Indicate the principal focus by writing an F. [1]

[Total: 9]

DO NOT WRITE IN THIS MARGIN
DO NOT WRITE IN THIS MARGIN
DO NOT WRITE IN THIS MARGIN
DO NOT WRITE IN THIS MARGIN
DO NOT WRITE IN THIS MARGIN

© Cambridge University Press & Assessment 2026

GradeMax

8 A heater is connected to a 230 V mains supply.

The current in the heater is 11.5 A.

(a) Calculate the resistance of the heater.

resistance = ... Ω [3]

(b) Calculate the power of the heater.

power = ... W [3]

(c) The current in the heater is large.

Give **one** reason why large currents can be dangerous.

..... [1]

(d) The live wire connects to a fuse which protects the circuit.

Explain how a fuse protects the circuit.

.....

.....

..... [2]

(e) The current in the heater is normally 11.5 A.

State a suitable value for the fuse.

Choose **one** of these values: 5A, 10A, 13A or 30A.

..... [1]

[Total: 10]

DO NOT WRITE IN THIS MARGIN
DO NOT WRITE IN THIS MARGIN
DO NOT WRITE IN THIS MARGIN
DO NOT WRITE IN THIS MARGIN
DO NOT WRITE IN THIS MARGIN

© Cambridge University Press & Assessment 2026

GradeMax

DO NOT WRITE IN THIS MARGIN
DO NOT WRITE IN THIS MARGIN
DO NOT WRITE IN THIS MARGIN
DO NOT WRITE IN THIS MARGIN
DO NOT WRITE IN THIS MARGIN

9 **(a)** Table 9.1 shows some features of three types of radioactive emission.
The table is incomplete.

Table 9.1

type of radioactive emission	nature of radioactive emission	charge on radioactive emission
alpha (α)	helium nucleus	
beta (β)		–1
gamma (γ)		0

Complete Table 9.1 by adding the missing information. [3]

(b) The nuclide notation for lithium-7 is:

$$^{7}_{3}\text{Li}.$$

(i) Determine the number of protons in a nucleus of lithium-7.

number of protons = ... [1]

(ii) Determine the number of neutrons in a nucleus of lithium-7.

number of neutrons = ... [1]

(c) The isotope radium-223 is radioactive and has a half-life of 11 days.

Calculate the fraction of a sample of radium-223 that remains after 33 days.

fraction remaining = ... [2]

[Total: 7]

© Cambridge University Press & Assessment 2026

GradeMax

10 **(a)** State the approximate time taken for the Moon to orbit the Earth. Include the unit.

time = ... unit ..... [1]

(b) Name the force that keeps the Moon in orbit around the Earth.

..... [1]

(c) A spacecraft on the Moon sends a radio signal to the Earth.
The radio signal takes 1.28 s to travel from the Moon to the Earth.
The speed of the radio signal is 3.0×10^8 m / s.

Calculate the distance from the Moon to the Earth.

distance = ... m [3]

[Total: 5]

DO NOT WRITE IN THIS MARGIN
DO NOT WRITE IN THIS MARGIN
DO NOT WRITE IN THIS MARGIN
DO NOT WRITE IN THIS MARGIN
DO NOT WRITE IN THIS MARGIN

© Cambridge University Press & Assessment 2026

GradeMax

BLANK PAGE

DO NOT WRITE IN THIS MARGIN
DO NOT WRITE IN THIS MARGIN
DO NOT WRITE IN THIS MARGIN
DO NOT WRITE IN THIS MARGIN
DO NOT WRITE IN THIS MARGIN

© Cambridge University Press & Assessment 2026

GradeMax

BLANK PAGE

DO NOT WRITE IN THIS MARGIN
DO NOT WRITE IN THIS MARGIN
DO NOT WRITE IN THIS MARGIN
DO NOT WRITE IN THIS MARGIN
DO NOT WRITE IN THIS MARGIN

Permission to reproduce items where third-party owned material protected by copyright is included has been sought and cleared where possible. Every reasonable effort has been made by the publisher (Cambridge University Press & Assessment) to trace copyright holders, but if any items requiring clearance have unwittingly been included, the publisher will be pleased to make amends at the earliest possible opportunity.

To avoid the issue of disclosure of answer-related information to candidates, all copyright acknowledgements are reproduced online in our Copyright Acknowledgements Booklet. This is produced for each series of examinations and is freely available to download at www.cambridgeinternational.org after the live examination series.

Cambridge International Education is the name of our awarding body and a part of Cambridge University Press & Assessment, which is a department of the University of Cambridge.

© Cambridge University Press & Assessment 2026