GradeMax

* 0000800000001 * DFD

CAMBRIDGE
International Education

Cambridge IGCSE™

CANDIDATE NAME

CENTRE NUMBER

CANDIDATE NUMBER

* 8 7 5 2 2 8 7 2 2 6 *

PHYSICS **0625/43**

Paper 4 Theory (Extended) **May/June 2026**

1 hour 15 minutes

You must answer on the question paper.

No additional materials are needed.

INSTRUCTIONS

- Answer **all** questions.
- Use a black or dark blue pen. You may use an HB pencil for any diagrams or graphs.
- Write your name, centre number and candidate number in the boxes at the top of the page.
- Write your answer to each question in the space provided.
- Do **not** use an erasable pen. Do **not** use correction fluid or tape.
- Do **not** write on any bar codes.
- You may use a calculator.
- You should show all your working and use appropriate units.
- Take the weight of 1.0 kg to be 9.8 N (acceleration of free fall = 9.8 m / s^2).

INFORMATION

- The total mark for this paper is 80.
- The number of marks for each question or part question is shown in brackets [ ].

This document has **20** pages. Any blank pages are indicated.

DC (CE/CT) 356660/2
© Cambridge University Press & Assessment 2026

[Turn over

GradeMax

1 **(a)** Figure 1.1 shows a speed–time graph for a toy aircraft.

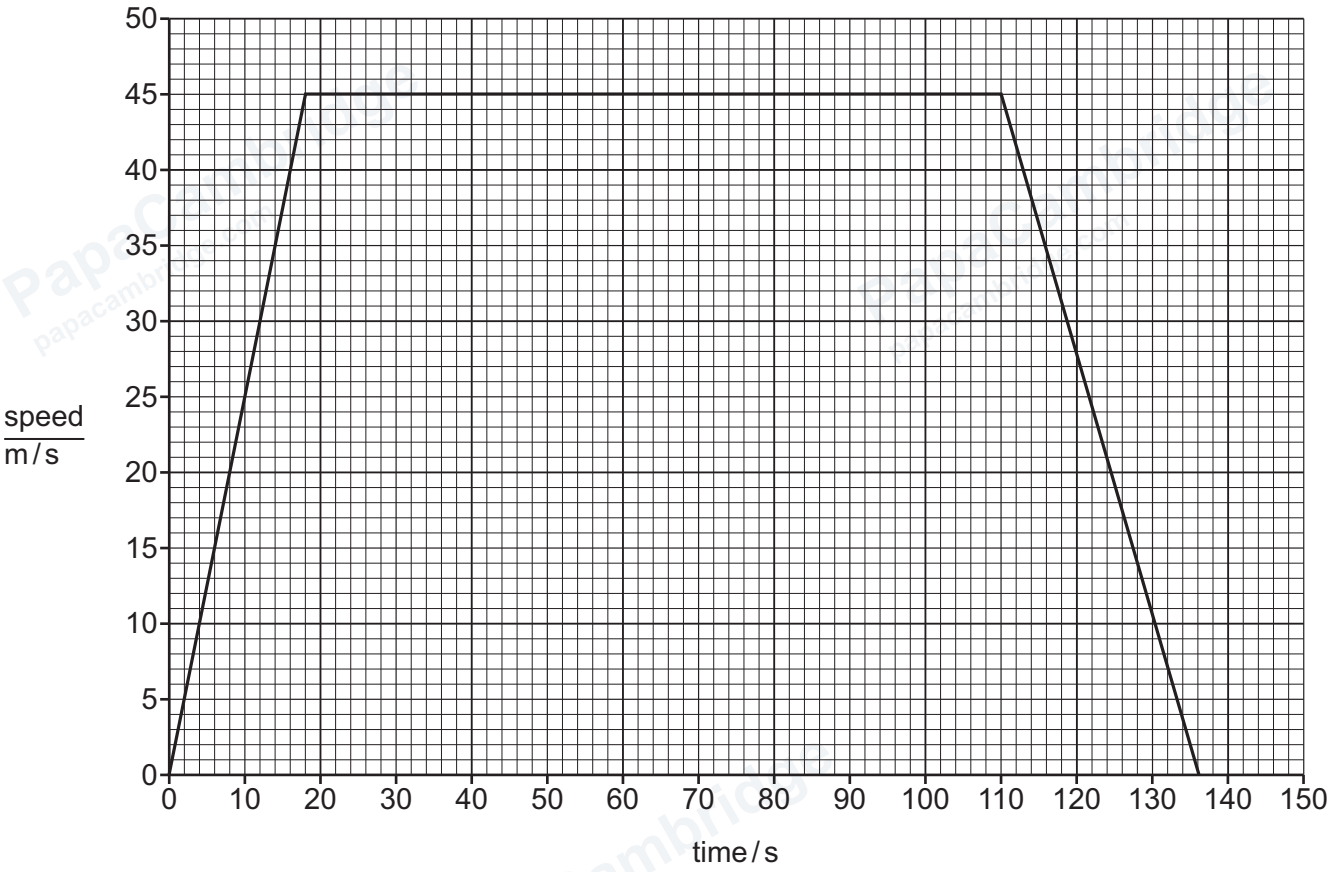

Figure 1.1

(i) Describe the motion between times:

18 s and 110 s .....

110 s and 136 s. .....

[2]

(ii) Calculate the distance travelled between time = 0 and time = 110 s.

distance = ... m [3]

© Cambridge University Press & Assessment 2026

DO NOT WRITE IN THIS MARGIN
DO NOT WRITE IN THIS MARGIN
DO NOT WRITE IN THIS MARGIN
DO NOT WRITE IN THIS MARGIN
DO NOT WRITE IN THIS MARGIN

GradeMax

(iii) Calculate the acceleration between time = 0 and time = 18 s.

acceleration = ... m/s^2 [2]

(b) A small aircraft travels at a constant speed of 60 m/s. The mass of the small aircraft is 820 kg.

Calculate the energy E_k in the kinetic store of the aircraft.

E_k = ... J [2]

[Total: 9]

DO NOT WRITE IN THIS MARGIN
DO NOT WRITE IN THIS MARGIN
DO NOT WRITE IN THIS MARGIN
DO NOT WRITE IN THIS MARGIN
DO NOT WRITE IN THIS MARGIN

© Cambridge University Press & Assessment 2026

GradeMax

2 Figure 2.1 shows a diagram of a car brake pedal. The driver applies a force of 14 N to the end of the brake pedal. The piston applies a force of 72 N to the brake pedal.

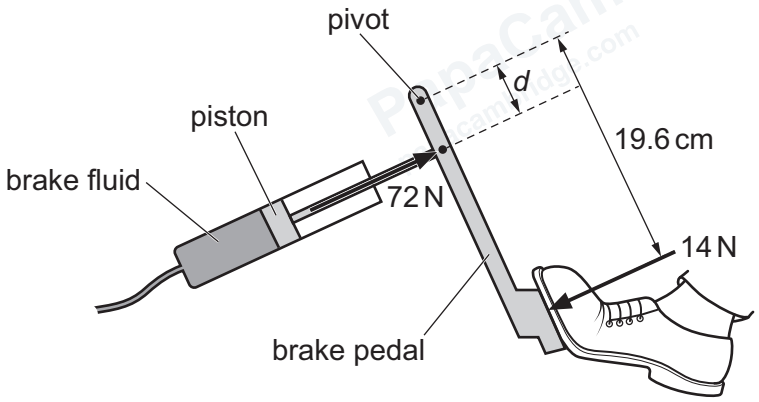

Figure 2.1

(a) Show that the moment of the 14 N force about the pivot is approximately 270 N cm.

[1]

(b) The brake pedal is stationary. The piston exerts a force of 72 N on the brake pedal.

Calculate the distance *d*.

d = ... cm [2]

(c) The pressure exerted by the brake fluid on the piston is 8.4×10^4 Pa.

Calculate the cross-sectional area of the piston.

cross-sectional area = ... m^2 [2]

[Total: 5]

© Cambridge University Press & Assessment 2026

DO NOT WRITE IN THIS MARGIN
DO NOT WRITE IN THIS MARGIN
DO NOT WRITE IN THIS MARGIN
DO NOT WRITE IN THIS MARGIN
DO NOT WRITE IN THIS MARGIN

GradeMax

DO NOT WRITE IN THIS MARGIN
DO NOT WRITE IN THIS MARGIN
DO NOT WRITE IN THIS MARGIN
DO NOT WRITE IN THIS MARGIN
DO NOT WRITE IN THIS MARGIN

3 A balloon contains helium gas.

(a) Explain how the particles of helium gas in the balloon exert a pressure on the inside of the balloon.

.....

.....

.....

..... [3]

(b) The balloon contains a volume of 12 m^3 of helium gas at a pressure of 110 kPa.

The balloon is released and rises to a height *h* where the pressure of the gas is 52 kPa.

The temperature and the mass of helium gas remain constant.

(i) Calculate the volume of the helium gas at height *h*.

volume = ... m^3 [2]

(ii) At height *h*, the balloon has gained 120 kJ of energy in the gravitational potential store.

The mass of the balloon is 2.5 kg.

Calculate the height *h*.

h = ... m [3]

[Total: 8]

© Cambridge University Press & Assessment 2026

4 **(a)** Figure 4.1 shows a pan of water on a hotplate.

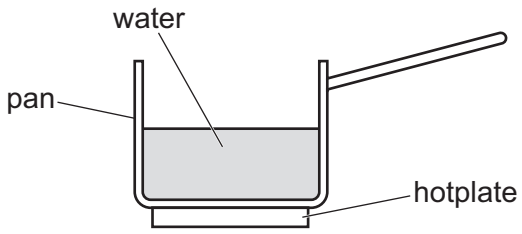

Figure 4.1

The mass of water in the pan is 200 g.
The specific heat capacity of water is 4.2 J / (g °C).

(i) The temperature of the water increases from 22 °C to 80 °C.

Show that the energy transferred to the water is approximately 49 kJ.

[2]

(ii) The time taken for the temperature of the water to increase from 22 °C to 80 °C is 41 s.

Calculate the minimum power of the hotplate.

power = ... W [2]

(iii) State **one** reason why the power of the hotplate must be greater than the value calculated in **4(a)(ii)**.

.....

..... [1]

DO NOT WRITE IN THIS MARGIN
DO NOT WRITE IN THIS MARGIN
DO NOT WRITE IN THIS MARGIN
DO NOT WRITE IN THIS MARGIN
DO NOT WRITE IN THIS MARGIN

GradeMax

(b) Describe, in terms of particles and their motion, **two** ways in which a gas differs from a liquid.

1 .....

.....

2 .....

.....

[2]

[Total: 7]

DO NOT WRITE IN THIS MARGIN
DO NOT WRITE IN THIS MARGIN
DO NOT WRITE IN THIS MARGIN
DO NOT WRITE IN THIS MARGIN
DO NOT WRITE IN THIS MARGIN

PapaCambridge papacambridge.com

5 Waves can be transverse or longitudinal.

(a) (i) Complete the sentence to describe a longitudinal wave.

In a longitudinal wave, the direction of vibration is ..... to the direction of propagation. [1]

(ii) Give **one** example of a longitudinal wave.

..... [1]

(b) A vibrating rod produces a water wave in a ripple tank.

(i) The wavelength of the wave is 0.016 m.

The wave is travelling at a speed of 0.12 m/s.

Calculate the frequency of the wave. Give the unit.

frequency = ... unit ..... [2]

(ii) The water wave travels from shallow water to deep water.

Complete Table 5.1 to show what happens to the properties of the water wave.

Indicate your answers by placing ticks (✓) in the appropriate boxes. One has been done for you.

Table 5.1

	from shallow water to deep water		
wave property	**decreases**	**stays the same**	**increases**
wavelength			✓
frequency			
speed			

[2]

© Cambridge University Press & Assessment 2026

GradeMax

DO NOT WRITE IN THIS MARGIN

PapaCambridge

(c) Figure 5.1 shows a ripple tank demonstrating a wave effect.

The wave passes through a small gap in a barrier.

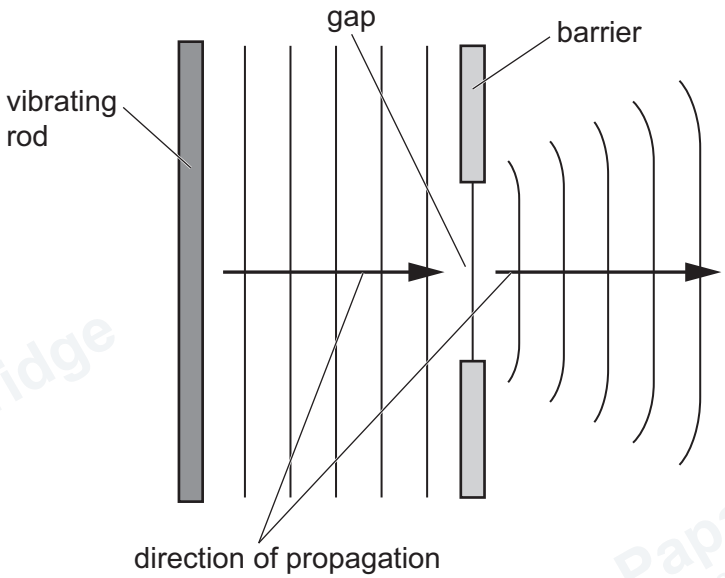

Figure 5.1

(i) State the name of the wave effect shown in Figure 5.1.

..... [1]

(ii) State **two** changes that each increase the curvature of the wavefronts as the wave passes through the gap.

1 .....

2 .....

[2]

[Total: 9]

DO NOT WRITE IN THIS MARGIN
DO NOT WRITE IN THIS MARGIN
DO NOT WRITE IN THIS MARGIN
DO NOT WRITE IN THIS MARGIN
DO NOT WRITE IN THIS MARGIN

GradeMax

6 **(a)** An image of object O is formed by a plane mirror.

A person views the image. Figure 6.1 shows a scale diagram of the arrangement.

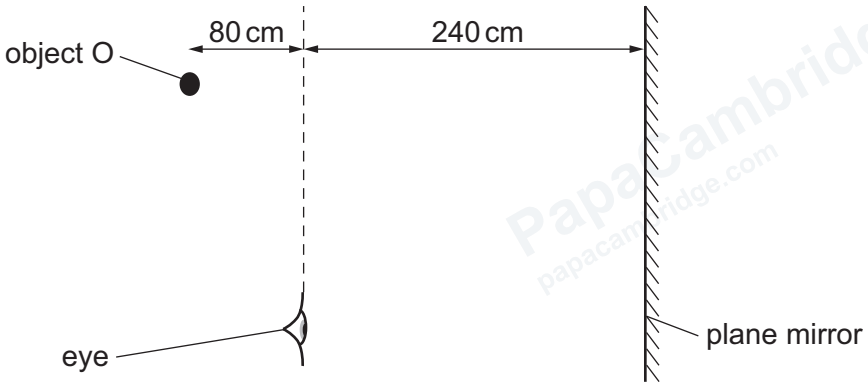

Figure 6.1

(i) Mark the position of the image. Label it I. [1]

(ii) Draw on Figure 6.1 to show the path of the light from object O to the person's eye. [2]

(b) Figure 6.2 shows three rays of light travelling from a light source S. The rays travel in glass towards a glass–water boundary.

NOT TO SCALE

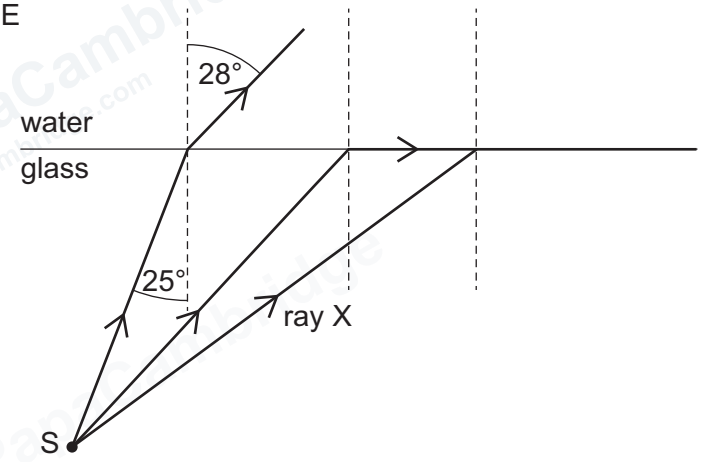

Figure 6.2

(i) Calculate the refractive index for the glass–water boundary. Use information from Figure 6.2.

refractive index = ... [2]

(ii) On Figure 6.2, label the critical angle *c*. [1]

(iii) On Figure 6.2, continue the path of ray X after it reaches the glass–water boundary. [1]

[Total: 7]

© Cambridge University Press & Assessment 2026

DO NOT WRITE IN THIS MARGIN
DO NOT WRITE IN THIS MARGIN
DO NOT WRITE IN THIS MARGIN
DO NOT WRITE IN THIS MARGIN
DO NOT WRITE IN THIS MARGIN

GradeMax

7 A student connects the circuit shown in Figure 7.1.

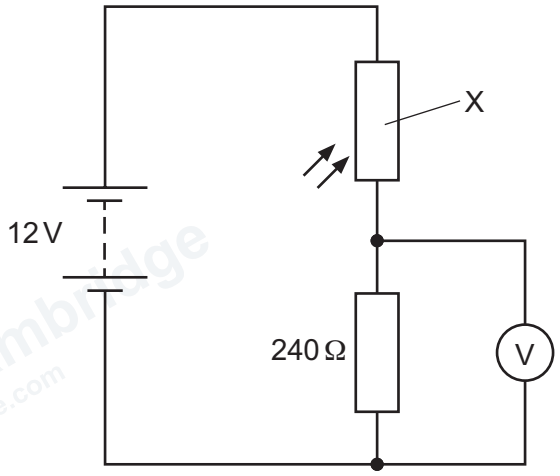

Figure 7.1

(a) The connecting wires in the circuit are made of metal.

State the name of the particles that flow in the metal wires.

..... [1]

(b) A bright light shines on component X.

(i) State the name of component X.

..... [1]

(ii) The resistance of component X is 400 Ω when the light shines on it.

Calculate the reading on the voltmeter.

reading on the voltmeter = ... V [3]

(c) The brightness of the light shining on component X is reduced. The resistance of component X increases.

State the effect of this change on:

the current in the fixed resistor .....

the reading on the voltmeter. .....

[2]

[Total: 7]

© Cambridge University Press & Assessment 2026

DO NOT WRITE IN THIS MARGIN
DO NOT WRITE IN THIS MARGIN
DO NOT WRITE IN THIS MARGIN
DO NOT WRITE IN THIS MARGIN
DO NOT WRITE IN THIS MARGIN

GradeMax

8 **(a)** A teacher uses the arrangement shown in Figure 8.1 to demonstrate how an intruder alarm works.

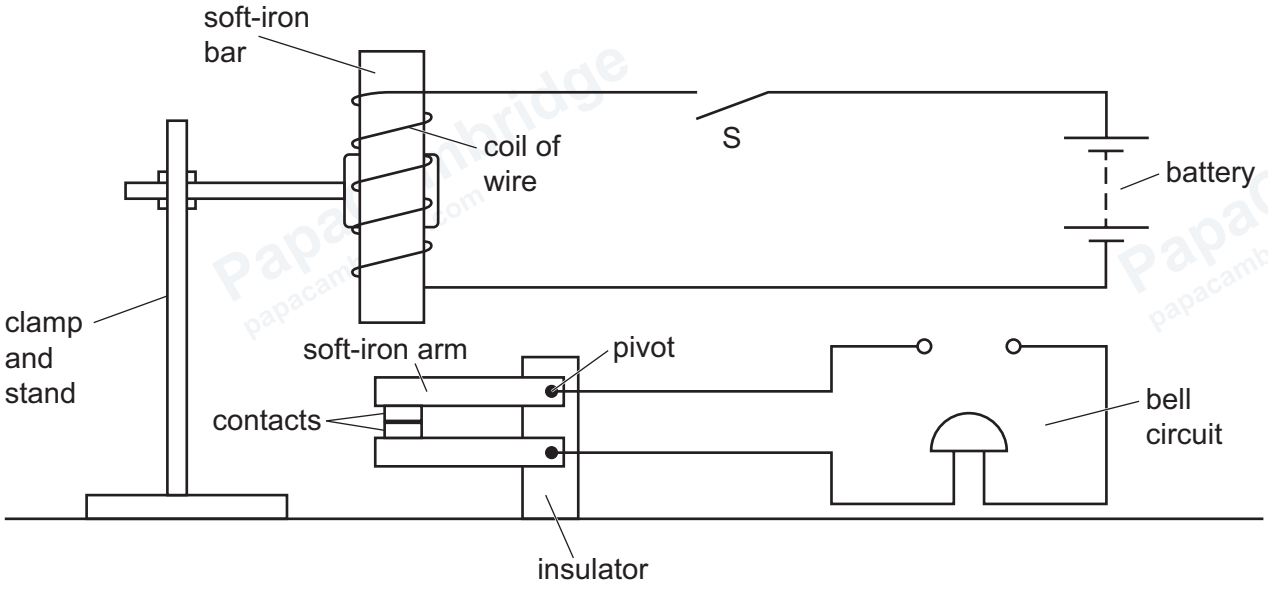

Figure 8.1

Switch S is connected to a door. When the door is open, switch S is open. When the door is closed, switch S is closed.

Complete the sentences to explain how the arrangement can be used as an intruder alarm.

The teacher closes the door and the battery produces a .....

in the coil of wire.

The soft-iron bar is ..... and attracts the soft-iron arm.

When the door is opened, the contacts touch and this .....

the bell circuit, causing the bell to ring.

[3]

DO NOT WRITE IN THIS MARGIN
DO NOT WRITE IN THIS MARGIN
DO NOT WRITE IN THIS MARGIN
DO NOT WRITE IN THIS MARGIN
DO NOT WRITE IN THIS MARGIN

© Cambridge University Press & Assessment 2026

GradeMax

(b) Figure 8.2 shows a transformer that is 100% efficient.

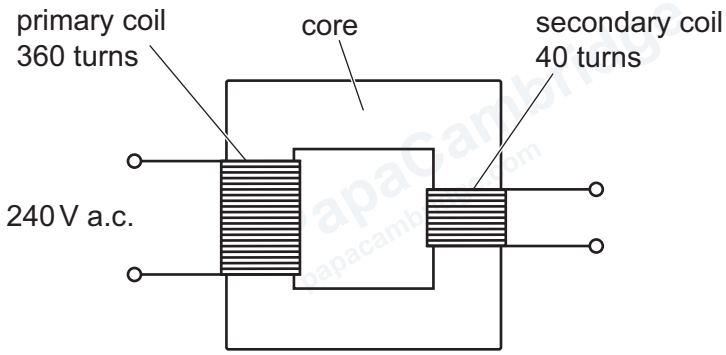

Figure 8.2

(i) Calculate the voltage V_s across the secondary coil.

V_s = ... V [2]

(ii) A student connects the primary coil of the transformer to a d.c. supply.

Explain why there is no voltage across the secondary coil.

.....

.....

..... [2]

[Total: 7]

DO NOT WRITE IN THIS MARGIN
DO NOT WRITE IN THIS MARGIN
DO NOT WRITE IN THIS MARGIN
DO NOT WRITE IN THIS MARGIN
DO NOT WRITE IN THIS MARGIN

GradeMax

9 **(a)** Figure 9.1 shows a copper cylinder placed on two metal rods in the magnetic field between the poles of a magnet.

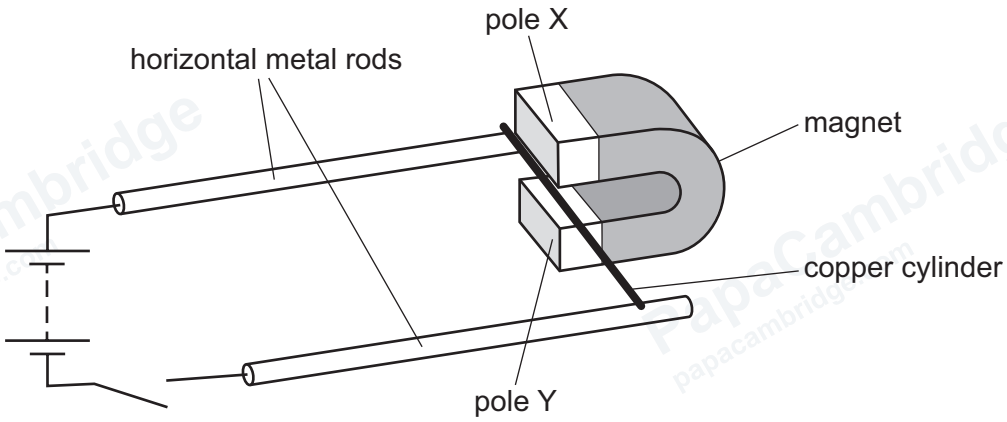

Figure 9.1

The switch is closed.

(i) On Figure 9.1, mark with an arrow the direction of the current in the copper cylinder. [1]

(ii) The copper cylinder moves to the left along the horizontal metal rods.

Complete the sentences about pole X and pole Y.

Pole X is a ..... pole.

Pole Y is a ..... pole.

[1]

(iii) Suggest **two** changes that each increase the force on the copper cylinder.

1 .....

2 .....

[2]

DO NOT WRITE IN THIS MARGIN
DO NOT WRITE IN THIS MARGIN
DO NOT WRITE IN THIS MARGIN
DO NOT WRITE IN THIS MARGIN
DO NOT WRITE IN THIS MARGIN

© Cambridge University Press & Assessment 2026

GradeMax

(b) Figure 9.2 shows a d.c. motor.

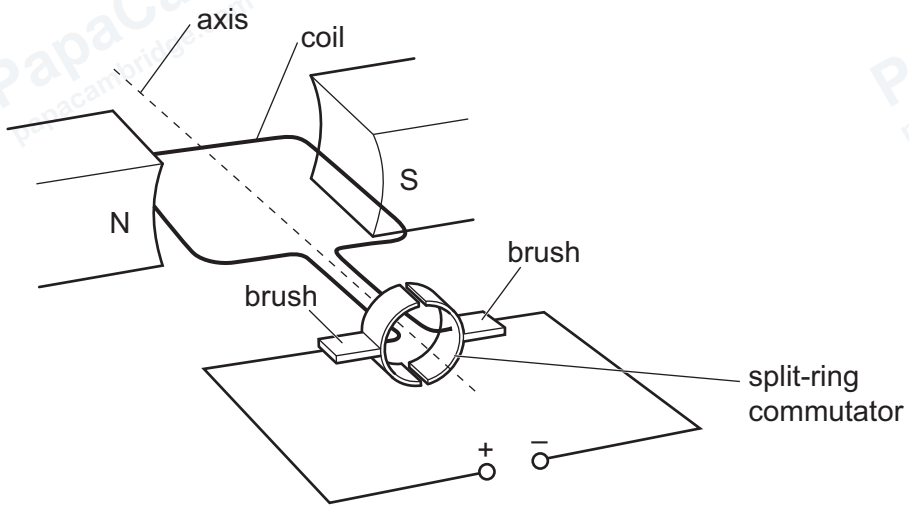

Figure 9.2

(i) Explain how the split-ring commutator allows the coil to rotate continuously.

.....

.....

..... [2]

(ii) Explain the purpose of the brushes.

.....

..... [1]

[Total: 7]

DO NOT WRITE IN THIS MARGIN
DO NOT WRITE IN THIS MARGIN
DO NOT WRITE IN THIS MARGIN
DO NOT WRITE IN THIS MARGIN
DO NOT WRITE IN THIS MARGIN

GradeMax

10 Carbon-14 and carbon-11 are different isotopes of carbon used in medicine.

(a) State the similarity and the difference between the composition of the nuclei of carbon-14 and carbon-11.

similarity .....

difference .....

[2]

(b) A carbon-14 nucleus decays into a nitrogen (N) nucleus by the emission of a beta particle (β-particle).

(i) Complete the nuclear equation for the decay.

$$^{14}_{6}C \rightarrow \quad\quad + \quad\quad$$

[2]

(ii) State the change that occurs in the carbon-14 nucleus during the decay.

..... [1]

(c) Scientists discover an ancient wooden object.

The object contains 1.0×10^{-10} g of carbon-14.

The object contained 8.0×10^{-10} g of carbon-14 when it was made.

Carbon-14 has a half-life of 5700 years.

Estimate the age of the ancient wooden object.

age = ... years [2]

[Total: 7]

DO NOT WRITE IN THIS MARGIN
DO NOT WRITE IN THIS MARGIN
DO NOT WRITE IN THIS MARGIN
DO NOT WRITE IN THIS MARGIN
DO NOT WRITE IN THIS MARGIN

© Cambridge University Press & Assessment 2026

GradeMax

DO NOT WRITE IN THIS MARGIN
DO NOT WRITE IN THIS MARGIN
DO NOT WRITE IN THIS MARGIN
DO NOT WRITE IN THIS MARGIN
DO NOT WRITE IN THIS MARGIN

11 **(a)** The Sun is an example of a stable star.

Describe the process that releases energy in the Sun.

.....

.....

..... [3]

(b) Complete the sentence about energy transferred from the Sun.

The Sun radiates most of its energy in the infrared, visible and .....

regions of the ..... spectrum.

[2]

(c) The Sun produces solar winds. Solar winds are streams of charged particles travelling through space.

A charge of 240 C passes through a region of space in 180 s.

Calculate the current in this region of space.

current = ... A [2]

[Total: 7]

© Cambridge University Press & Assessment 2026

GradeMax

BLANK PAGE

DO NOT WRITE IN THIS MARGIN
DO NOT WRITE IN THIS MARGIN
DO NOT WRITE IN THIS MARGIN
DO NOT WRITE IN THIS MARGIN
DO NOT WRITE IN THIS MARGIN

© Cambridge University Press & Assessment 2026

GradeMax

BLANK PAGE

DO NOT WRITE IN THIS MARGIN
DO NOT WRITE IN THIS MARGIN
DO NOT WRITE IN THIS MARGIN
DO NOT WRITE IN THIS MARGIN
DO NOT WRITE IN THIS MARGIN

© Cambridge University Press & Assessment 2026

GradeMax

BLANK PAGE

DO NOT WRITE IN THIS MARGIN
DO NOT WRITE IN THIS MARGIN
DO NOT WRITE IN THIS MARGIN
DO NOT WRITE IN THIS MARGIN
DO NOT WRITE IN THIS MARGIN

Permission to reproduce items where third-party owned material protected by copyright is included has been sought and cleared where possible. Every reasonable effort has been made by the publisher (Cambridge University Press & Assessment) to trace copyright holders, but if any items requiring clearance have unwittingly been included, the publisher will be pleased to make amends at the earliest possible opportunity.

To avoid the issue of disclosure of answer-related information to candidates, all copyright acknowledgements are reproduced online in our Copyright Acknowledgements Booklet. This is produced for each series of examinations and is freely available to download at www.cambridgeinternational.org after the live examination series.

Cambridge International Education is the name of our awarding body and a part of Cambridge University Press & Assessment, which is a department of the University of Cambridge.

© Cambridge University Press & Assessment 2026