GradeMax

* 0000800000001 * DFD

CAMBRIDGE
International Education

Cambridge IGCSE™

CANDIDATE NAME

CENTRE NUMBER

CANDIDATE NUMBER

8221252706

PHYSICS **0625/51**

Paper 5 Practical Test **May/June 2026**

1 hour 15 minutes

You must answer on the question paper.

You will need: The materials and apparatus listed in the confidential instructions

INSTRUCTIONS

- Answer **all** questions.
- Use a black or dark blue pen. You may use an HB pencil for any diagrams or graphs.
- Write your name, centre number and candidate number in the boxes at the top of the page.
- Write your answer to each question in the space provided.
- Do **not** use an erasable pen. Do **not** use correction fluid or tape.
- Do **not** write on any bar codes.
- You may use a calculator.
- You should show all your working and use appropriate units.

INFORMATION

- The total mark for this paper is 40.
- The number of marks for each question or part question is shown in brackets [ ].

For Examiner's Use	
1	
2	
3	
4	
Total	

This document has **12** pages. Any blank pages are indicated.

DC (WW/FC) 356682/2
© Cambridge University Press & Assessment 2026

[Turn over

1 In this experiment, you will investigate the balancing of a metre ruler.

(a) Refer to Figure 1.1.

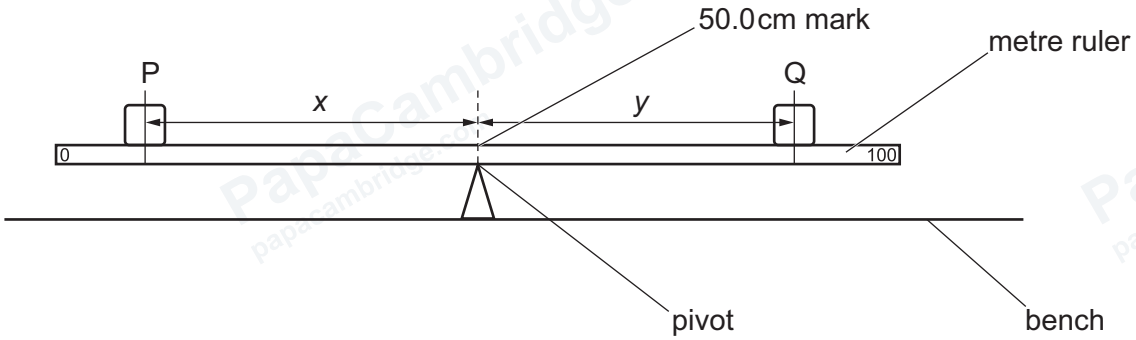

Figure 1.1

(i) Place the metre ruler with the 50.0 cm mark exactly above the pivot.

Place the object P with its centre on the metre ruler at the 10.0 cm mark.

The distance x = 40.0 cm between the centre of object P and the 50.0 cm mark is recorded in Table 1.1.

Place the object Q on the metre ruler. Adjust the position of Q until the metre ruler is as close as possible to being balanced.

Record, in Table 1.1, the distance y between the centre of object Q and the 50.0 cm mark.

Table 1.1

***x*/cm**	***y*/cm**
40.0	

[1]

(ii) Repeat the steps above using distances between the centre of object P and the 50.0 cm mark of x = 35.0 cm, 30.0 cm, 25.0 cm and 20.0 cm.

Record all the values of x and y in Table 1.1. [3]

© Cambridge University Press & Assessment 2026

DO NOT WRITE IN THIS MARGIN
DO NOT WRITE IN THIS MARGIN
DO NOT WRITE IN THIS MARGIN
DO NOT WRITE IN THIS MARGIN
DO NOT WRITE IN THIS MARGIN

GradeMax

(b) Plot a graph of y / cm (y-axis) against x / cm (x-axis). You do **not** need to start the axes at the origin (0,0).

Draw a best-fit straight line.

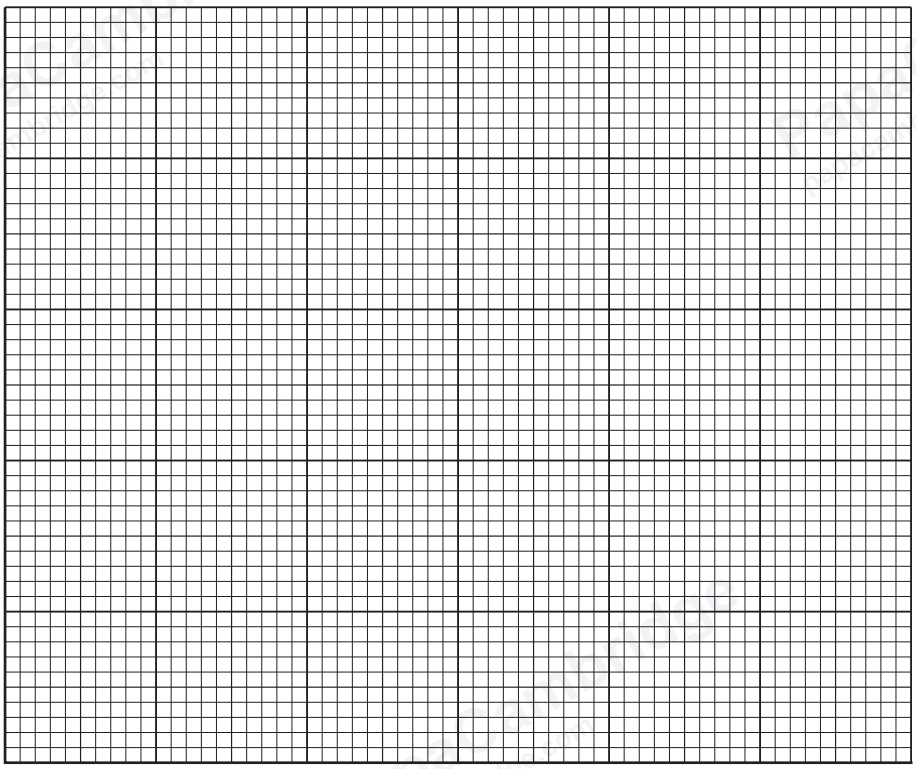

[4]

(c) Determine the gradient G of the graph. Show clearly on the graph how you obtained the necessary information.

G = ... [3]

[Total: 11]

DO NOT WRITE IN THIS MARGIN
DO NOT WRITE IN THIS MARGIN
DO NOT WRITE IN THIS MARGIN
DO NOT WRITE IN THIS MARGIN
DO NOT WRITE IN THIS MARGIN

© Cambridge University Press & Assessment 2026

GradeMax

2 In this experiment, you will investigate the resistance of a wire.

Refer to Figure 2.1. The circuit has been set up for you.

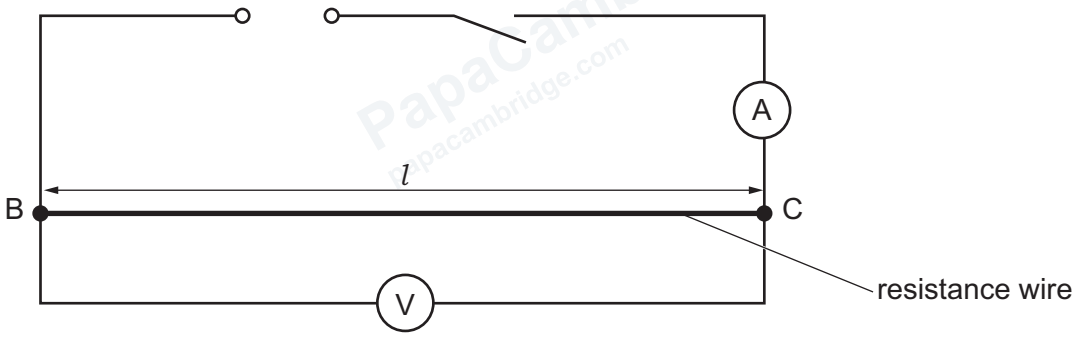

Figure 2.1

(a) (i) Close the switch.

Measure the current I_1 in the circuit. Include the unit.

I_1 = ... unit ..... [1]

(ii) Measure the potential difference (p.d.) V_1 across the resistance wire connected between B and C. Include the unit.

V_1 = ... unit ..... [1]

Open the switch.

(iii) Calculate the resistance R_1 of the resistance wire using the equation:

$$R_1 = \frac{V_1}{I_1}.$$

R_1 = ... Ω [1]

(iv) The length of the resistance wire is 50 cm.

Calculate r, the resistance per cm of the resistance wire, using the equation:

$$r = \frac{R_1}{50\,\text{cm}}.$$

r = ... Ω / cm [1]

© Cambridge University Press & Assessment 2026

DO NOT WRITE IN THIS MARGIN
DO NOT WRITE IN THIS MARGIN
DO NOT WRITE IN THIS MARGIN
DO NOT WRITE IN THIS MARGIN
DO NOT WRITE IN THIS MARGIN

GradeMax

(b) You are provided with a length of the same resistance wire wound on a wooden rod.

(i) Record the number of whole turns N of wire on the rod.

N = ...

Measure the diameter d of the rod. Give your answer in centimetres to the nearest millimetre.

d = ... cm
[1]

(ii) Calculate a value l_1 for the length of wire on the rod using the equation:

$$l_1 = N\pi d.$$

l_1 = ... cm [1]

(c) Disconnect the voltmeter from the circuit.

Disconnect the resistance wire from B and C.

Connect the wire on the rod to the circuit at B and C. Do **not** remove the wire from the rod.

Connect the voltmeter across BC.

(i) Close the switch.

Measure the current I_2 in the circuit.

I_2 = ...

Measure the potential difference (p.d.) V_2 across the resistance wire on the rod.

V_2 = ...
[1]

Open the switch.

(ii) Calculate the resistance R_2 of the resistance wire on the rod using the equation:

$$R_2 = \frac{V_2}{I_2}.$$

R_2 = ... Ω [1]

© Cambridge University Press & Assessment 2026

DO NOT WRITE IN THIS MARGIN
DO NOT WRITE IN THIS MARGIN
DO NOT WRITE IN THIS MARGIN
DO NOT WRITE IN THIS MARGIN
DO NOT WRITE IN THIS MARGIN

(d) Calculate another value l_2 for the length of resistance wire on the rod using your values from **2(a)(iv)** and **2(c)(ii)** and the equation:

$$l_2 = \frac{R_2}{r}.$$

Give your answer in centimetres to the nearest millimetre.

l_2 = ... cm [1]

(e) A student does this experiment and obtains values of the lengths l_1 and l_2 that are different from each other.

The value l_1 from **2(b)(ii)** is from distance measurements. The value l_2 from **2(d)** involves electrical measurements.

Suggest which value, l_1 or l_2, is more accurate. Give a reason for your answer, comparing the two methods.

suggestion .....

reason .....

.....

.....

[2]

[Total: 11]

DO NOT WRITE IN THIS MARGIN
DO NOT WRITE IN THIS MARGIN
DO NOT WRITE IN THIS MARGIN
DO NOT WRITE IN THIS MARGIN
DO NOT WRITE IN THIS MARGIN

© Cambridge University Press & Assessment 2026

GradeMax

DO NOT WRITE IN THIS MARGIN
DO NOT WRITE IN THIS MARGIN
DO NOT WRITE IN THIS MARGIN
DO NOT WRITE IN THIS MARGIN
DO NOT WRITE IN THIS MARGIN

Turn over

PapaCambridge papacambridge.com

GradeMax

3 In this experiment, you will investigate the image produced by a converging lens.

Refer to Figure 3.1 and Figure 3.2.

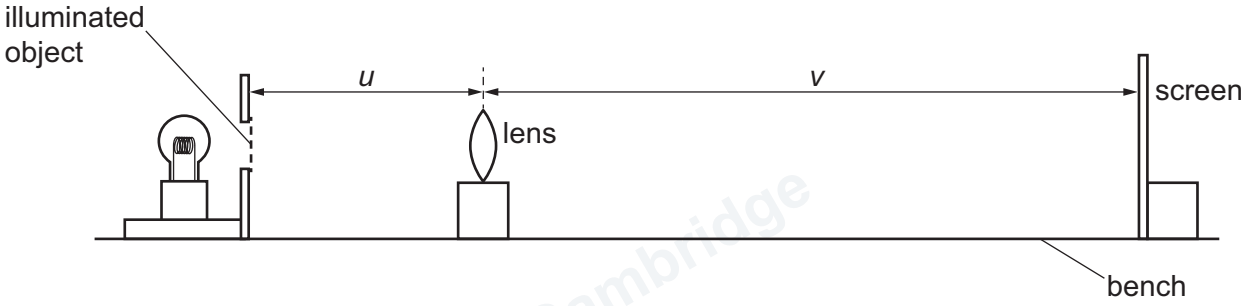

Figure 3.1

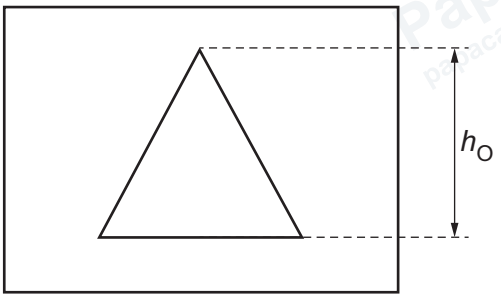

Figure 3.2

(a) Measure the height h_O of your illuminated object.

Figure 3.2 indicates the height to measure on the illuminated object provided.
Give your answer in centimetres to the nearest millimetre. Include the unit.

h_O = ... unit ..... [2]

(b)
- Place the lens a distance u = 20.0 cm from the illuminated object.
- Adjust the position of the screen until a focused image is formed on the screen.

(i) Measure the distance v between the centre of the lens and the screen.

v = ... cm [1]

(ii) Measure the height h_1 of the image on the screen.
Give your answer in centimetres to the nearest millimetre. Include the unit.

h_1 = ... [1]

(c) Calculate the magnification m_1 using the equation:

$$m_1 = \frac{h_1}{h_O}.$$

m_1 = ... [1]

© Cambridge University Press & Assessment 2026

DO NOT WRITE IN THIS MARGIN
DO NOT WRITE IN THIS MARGIN
DO NOT WRITE IN THIS MARGIN
DO NOT WRITE IN THIS MARGIN
DO NOT WRITE IN THIS MARGIN

GradeMax

(d) Place the lens at a distance v from the illuminated object. Use your value of v from **3(b)(i)**. Adjust the position of the screen until a focused image is formed on the screen.

Record the distance y between the centre of the lens and the screen.

y = ... [1]

(e) Measure the height h_2 of the image.

h_2 = ...

Calculate the magnification m_2 using the equation:

$$m_2 = \frac{h_2}{h_O}.$$

m_2 = ...
[1]

(f) A student suggests that the product $m_1 \times m_2$ should be 1.00.

State whether your results support this suggestion and justify your answer by reference to the results.

statement .....

justification .....

.....

.....
[2]

(g) In this type of experiment, it can be difficult to judge the screen position that produces the clearest image.

Suggest **two** techniques to overcome this difficulty.

1 .....

.....

2 .....

.....
[2]

[Total: 11]

© Cambridge University Press & Assessment 2026

DO NOT WRITE IN THIS MARGIN
DO NOT WRITE IN THIS MARGIN
DO NOT WRITE IN THIS MARGIN
DO NOT WRITE IN THIS MARGIN
DO NOT WRITE IN THIS MARGIN

GradeMax

4 A student investigates the time taken to boil water when heated in containers made from different metals.

The containers are heated on an electric hotplate, as shown in Figure 4.1.

Plan an experiment to compare how quickly water reaches boiling point in the different containers.

You are **not** required to do this experiment.

The following apparatus is available to the student:

- containers labelled A, B, C, D and E. The containers are identical except that each is made from a different metal
- supply of cold water
- electric hotplate.

Other apparatus normally available in a school laboratory can also be used.

In your plan:

- name any other apparatus needed
- give a brief description of the method, including what you will measure and how you make sure that your measurements are accurate
- state the key variables to be kept constant
- draw a table, with column headings, to show how to display the readings (you are **not** required to enter any readings in the table)
- explain how to use the readings to reach a conclusion.

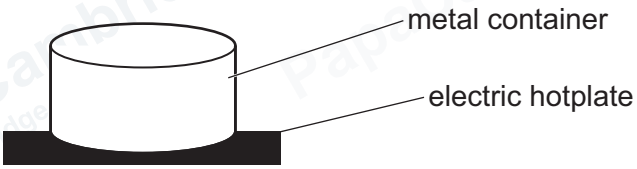

Figure 4.1

DO NOT WRITE IN THIS MARGIN
DO NOT WRITE IN THIS MARGIN
DO NOT WRITE IN THIS MARGIN
DO NOT WRITE IN THIS MARGIN
DO NOT WRITE IN THIS MARGIN

© Cambridge University Press & Assessment 2026

GradeMax

DO NOT WRITE IN THIS MARGIN
DO NOT WRITE IN THIS MARGIN
DO NOT WRITE IN THIS MARGIN
DO NOT WRITE IN THIS MARGIN
DO NOT WRITE IN THIS MARGIN

.....

.....

.....

.....

.....

.....

.....

.....

.....

.....

.....

.....

.....

.....

.....

.....

.....

..... [7]

PapaCambridge papacambridge.com

GradeMax

BLANK PAGE

DO NOT WRITE IN THIS MARGIN
DO NOT WRITE IN THIS MARGIN
DO NOT WRITE IN THIS MARGIN
DO NOT WRITE IN THIS MARGIN
DO NOT WRITE IN THIS MARGIN

Permission to reproduce items where third-party owned material protected by copyright is included has been sought and cleared where possible. Every reasonable effort has been made by the publisher (Cambridge University Press & Assessment) to trace copyright holders, but if any items requiring clearance have unwittingly been included, the publisher will be pleased to make amends at the earliest possible opportunity.

To avoid the issue of disclosure of answer-related information to candidates, all copyright acknowledgements are reproduced online in our Copyright Acknowledgements Booklet. This is produced for each series of examinations and is freely available to download at www.cambridgeinternational.org after the live examination series.

Cambridge International Education is the name of our awarding body and a part of Cambridge University Press & Assessment, which is a department of the University of Cambridge.

© Cambridge University Press & Assessment 2026