GradeMax

CAMBRIDGE
International Education

Cambridge IGCSE™

CANDIDATE NAME

CENTRE NUMBER

CANDIDATE NUMBER

2628006486

PHYSICS **0625/62**

Paper 6 Alternative to Practical **May/June 2026**

1 hour

You must answer on the question paper.

No additional materials are needed.

INSTRUCTIONS

- Answer **all** questions.
- Use a black or dark blue pen. You may use an HB pencil for any diagrams or graphs.
- Write your name, centre number and candidate number in the boxes at the top of the page.
- Write your answer to each question in the space provided.
- Do **not** use an erasable pen. Do **not** use correction fluid or tape.
- Do **not** write on any bar codes.
- You may use a calculator.
- You should show all your working and use appropriate units.

INFORMATION

- The total mark for this paper is 40.
- The number of marks for each question or part question is shown in brackets [ ].

This document has **16** pages. Any blank pages are indicated.

DC (WW/CB) 356678/2
© Cambridge University Press & Assessment 2026

[Turn over

GradeMax

1 A student determines the density of a wooden block by two different methods.

Figure 1.1 shows a full-size diagram of the wooden block.

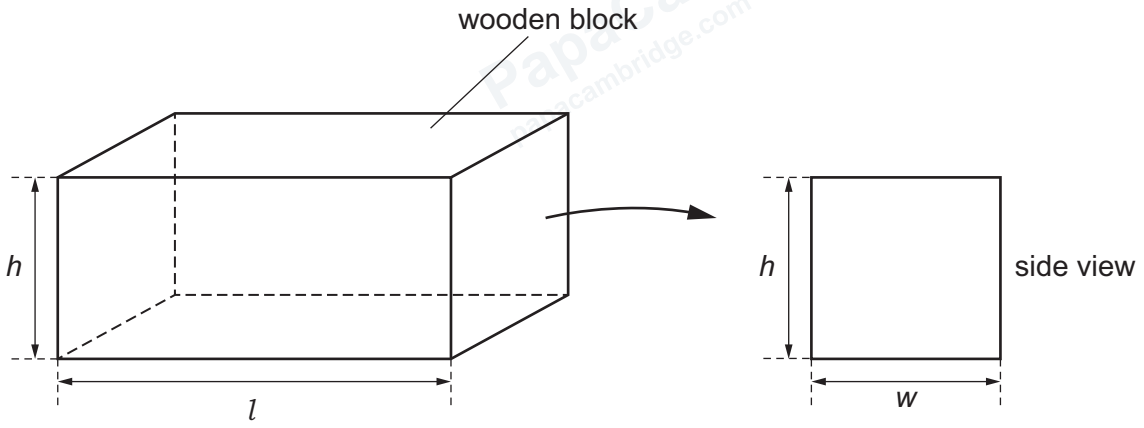

Figure 1.1

Method 1

(a) (i) Measure the length l, the width w and the height h of the wooden block in centimetres to the nearest millimetre.

l = ... cm

w = ... cm

h = ... cm
[2]

(ii) Calculate the volume V_B of the wooden block. Use the equation:

$$V_B = l \times w \times h.$$

V_B = ... cm^3 [1]

© Cambridge University Press & Assessment 2026

DO NOT WRITE IN THIS MARGIN
DO NOT WRITE IN THIS MARGIN
DO NOT WRITE IN THIS MARGIN
DO NOT WRITE IN THIS MARGIN
DO NOT WRITE IN THIS MARGIN

GradeMax

(b) (i) The student uses a balance to measure the mass M of the block.

The balance reading is shown in Figure 1.2.

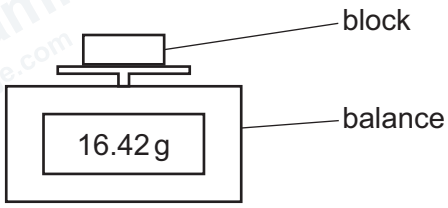

Figure 1.2

Record the mass M of the block to the nearest gram.

M = ... g [1]

(ii) Calculate a value ρ_1 for the density of the block. Use your results from **1(a)(ii)** and **1(b)(i)** and the equation:

$$\rho_1 = \frac{M}{V_B}.$$

ρ_1 = ... g / cm^3 [1]

Method 2

The student is provided with two beakers, X and Y. Each beaker contains 200 cm^3 of water.

The student is also provided with a measuring cylinder containing water.

The measuring cylinder is shown in Figure 1.3.

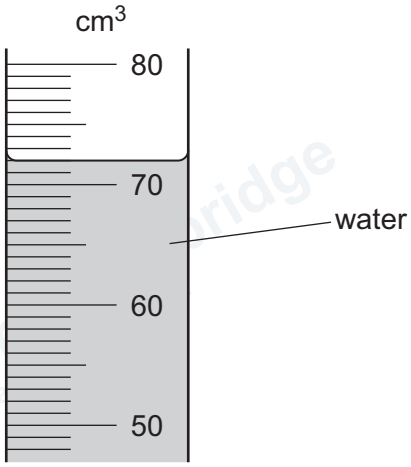

Figure 1.3

(c) Record the volume V_1 of water in the measuring cylinder.

V_1 = ... cm^3 [1]

© Cambridge University Press & Assessment 2026

DO NOT WRITE IN THIS MARGIN
DO NOT WRITE IN THIS MARGIN
DO NOT WRITE IN THIS MARGIN
DO NOT WRITE IN THIS MARGIN
DO NOT WRITE IN THIS MARGIN

(d) The student places the wooden block onto the surface of the water in beaker X.

The level of the water in beaker X rises as the wooden block displaces water and floats.

The student places beaker Y as close as possible to beaker X, as shown in Figure 1.4.

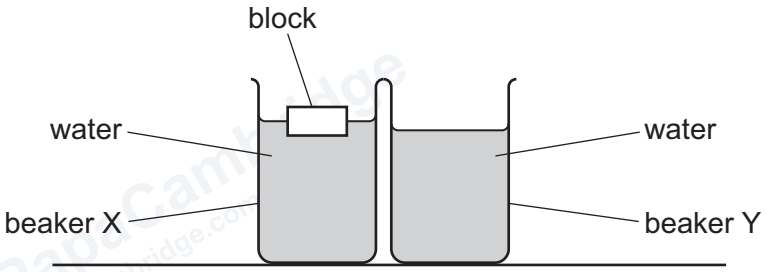

Figure 1.4

The student pours water from the measuring cylinder into beaker Y until the level of the water in beaker Y is the same as the level of the water in beaker X.

The water remaining in the measuring cylinder, after the water has been poured into beaker Y, is shown in Figure 1.5.

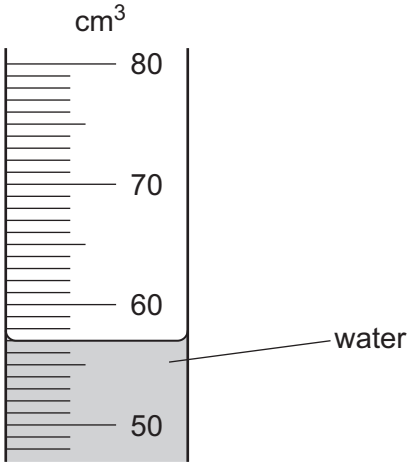

Figure 1.5

Record the volume V_2 of water remaining in the measuring cylinder.

V_2 = ... cm^3

Determine a value for the volume V of water displaced by the block. Use the equation:

$$V = V_1 - V_2.$$

V = ... cm^3
[1]

© Cambridge University Press & Assessment 2026

DO NOT WRITE IN THIS MARGIN
DO NOT WRITE IN THIS MARGIN
DO NOT WRITE IN THIS MARGIN
DO NOT WRITE IN THIS MARGIN
DO NOT WRITE IN THIS MARGIN

GradeMax

(e) A second value ρ_2 for the density of the block can be calculated using the equation:

$$\rho_2 = \frac{kV}{V_B}$$

where $k = 1.0\,g/cm^3$.

Use your answers to **1(d)** and **1(a)(ii)** to calculate ρ_2.

ρ_2 = ... g/cm^3 [1]

(f) Two quantities can be considered to be equal within the limits of experimental accuracy if their values are within 10% of each other.

State whether your values of ρ_1 from method 1 and ρ_2 from method 2 can be considered equal.

Support your statement with a calculation.

calculation

statement .....
[2]

(g) State **one** technique that the student uses in **1(d)** of method 2 to ensure that the levels of the water in beakers X and Y are the same.

.....

..... [1]

[Total: 11]

DO NOT WRITE IN THIS MARGIN
DO NOT WRITE IN THIS MARGIN
DO NOT WRITE IN THIS MARGIN
DO NOT WRITE IN THIS MARGIN
DO NOT WRITE IN THIS MARGIN

© Cambridge University Press & Assessment 2026

2 A student compares the rates of temperature increase of two different coloured surfaces.

The student uses two thermometers, one of which has a piece of white card attached to its bulb, and one of which has a piece of black card attached to its bulb. Both pieces of card are identical, except for the colour of their surfaces.

The student clamps the thermometers so that the bulb of each thermometer is level with the filament of a lamp.

The lamp is switched off.

Figure 2.1 shows the apparatus.

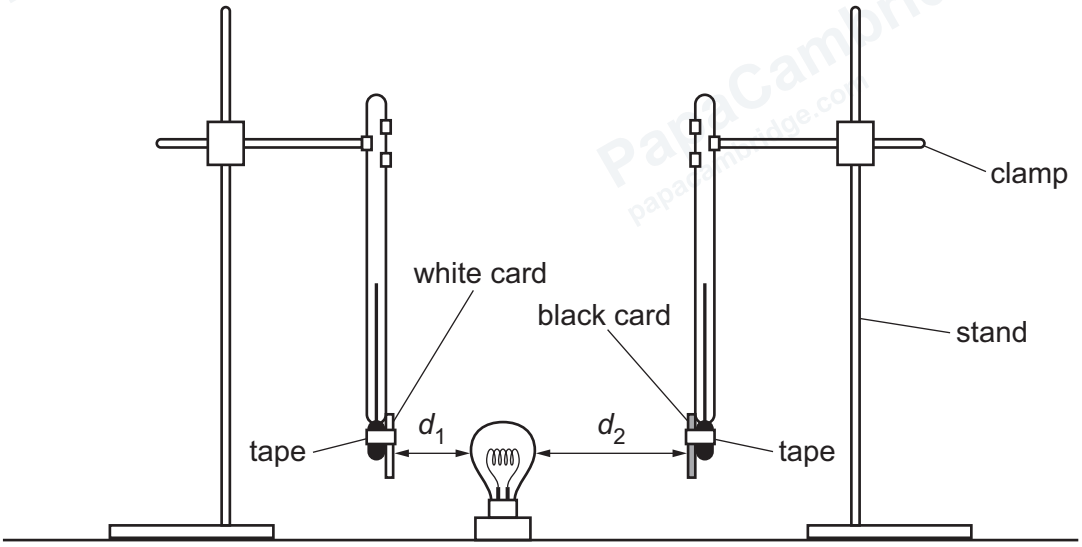

Figure 2.1

(a) The student:

- adjusts the distance d_1 between the lamp and the white card so that the card is 1.0 cm from the lamp
- adjusts the distance d_2 between the lamp and the black card.

(i) Measure, on Figure 2.1, the distance d_2 in centimetres to the nearest millimetre.

d_2 = ... cm [1]

© Cambridge University Press & Assessment 2026

GradeMax

DO NOT WRITE IN THIS MARGIN

DO NOT WRITE IN THIS MARGIN

DO NOT WRITE IN THIS MARGIN

DO NOT WRITE IN THIS MARGIN

DO NOT WRITE IN THIS MARGIN

GradeMax

(ii) The student:

- records, in Table 2.1, the temperature shown by each thermometer at time $t = 0$
- switches on the lamp, and at the same time starts a stopwatch
- waits for 4.0 minutes
- switches off the lamp
- takes the reading on each thermometer.

The readings shown by the thermometers at $t = 4.0$ min are shown in Figure 2.2.

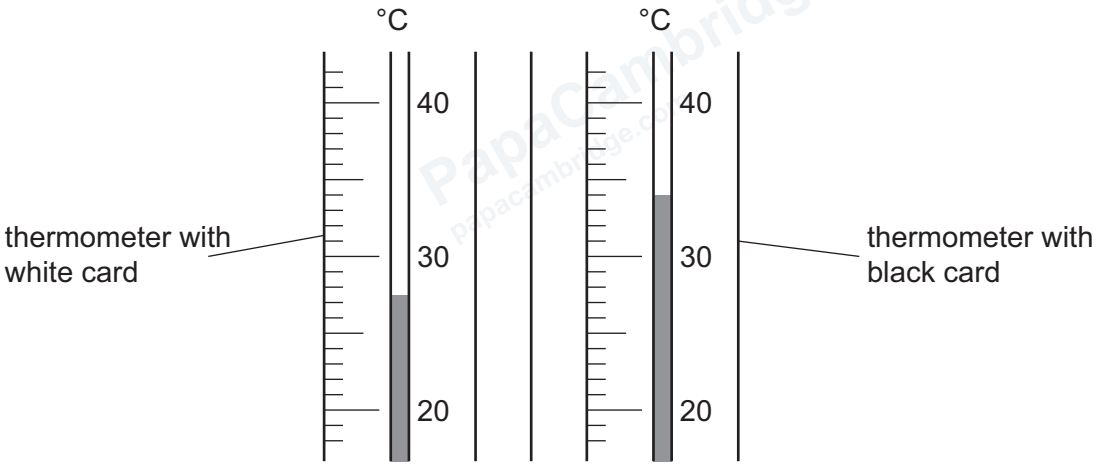

Figure 2.2

Record the readings in Table 2.1.

Table 2.1

time t/min	temperature of white card θ_W/°C	temperature of black card θ_B/°C
0	20.0	20.5
4.0		

[2]

DO NOT WRITE IN THIS MARGIN
DO NOT WRITE IN THIS MARGIN
DO NOT WRITE IN THIS MARGIN
DO NOT WRITE IN THIS MARGIN
DO NOT WRITE IN THIS MARGIN

© Cambridge University Press & Assessment 2026

(b) **(i)** Determine the temperature increase $\Delta\theta$ between t = 0 and t = 4.0 min for each card.

temperature increase of white card $\Delta\theta_W$ = ... °C

temperature increase of black card $\Delta\theta_B$ = ... °C
[1]

(ii) Calculate the rate of temperature increase of each card. Use the equation:

$$\text{rate of temperature increase} = \frac{\Delta\theta}{t}.$$

Give your answers to 2 significant figures. Include the unit in your answer.

rate of temperature increase of white card = ... unit .....

rate of temperature increase of black card = ... unit .....
[3]

(c) Write a conclusion which compares the rates of temperature increase of the two different coloured cards. Justify your answer using your values from **2(b)(ii)**.

.....

.....

..... [2]

(d) The temperature of each card increases as it absorbs thermal radiation.

The procedure used does **not** produce a fair comparison of the absorbing properties of the two different coloured cards.

(i) Suggest why the procedure does **not** produce a fair comparison.

.....

.....

..... [1]

(ii) State why your conclusion in **2(c)** would be the same, even if the comparison were fair.

.....

.....

..... [1]

[Total: 11]

© Cambridge University Press & Assessment 2026

DO NOT WRITE IN THIS MARGIN
DO NOT WRITE IN THIS MARGIN
DO NOT WRITE IN THIS MARGIN
DO NOT WRITE IN THIS MARGIN
DO NOT WRITE IN THIS MARGIN

GradeMax

3 A student investigates potential difference in an electric circuit and determines the resistance of an unknown resistor X.

The student assembles the circuit shown in Figure 3.1. The circuit consists of a resistor X connected in series with a resistor of resistance $R = 10\,\Omega$.

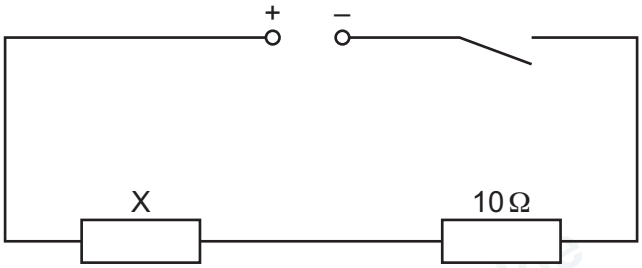

Figure 3.1

(a) The student:

- closes the switch
- connects a voltmeter in parallel with resistor X
- measures the potential difference (p.d.) *V* across resistor X
- opens the switch.

(i) On Figure 3.1, draw the voltmeter connected to measure the p.d. across resistor X. [1]

DO NOT WRITE IN THIS MARGIN
DO NOT WRITE IN THIS MARGIN
DO NOT WRITE IN THIS MARGIN
DO NOT WRITE IN THIS MARGIN
DO NOT WRITE IN THIS MARGIN

© Cambridge University Press & Assessment 2026

(ii) The voltmeter reading is shown in Figure 3.2.

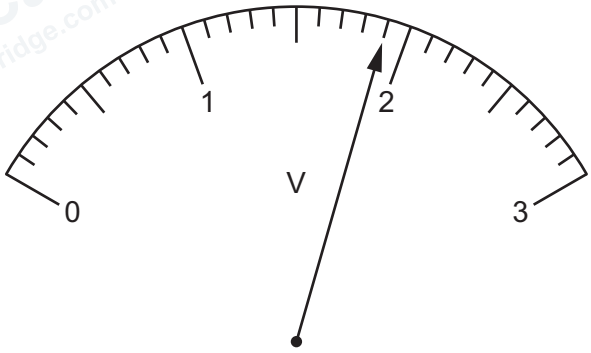

Figure 3.2

Record the voltmeter reading V in the second column of Table 3.1 for $R = 10\,\Omega$.

Table 3.1

resistance R/Ω	p.d. V/V	$\frac{1}{V}/\frac{1}{\text{V}}$
10		
15	1.6	
18	1.5	
22	1.3	
33	1.0	

[1]

(b) The student repeats **3(a)** by replacing the 10 Ω resistor with resistors of resistance $R = 15\,\Omega$, 18 Ω, 22 Ω and 33 Ω in turn. The student records the values of V in Table 3.1.

Calculate the value of $\frac{1}{V}$ for each value of V.

Record your values of $\frac{1}{V}$ in Table 3.1 to 2 significant figures. [2]

DO NOT WRITE IN THIS MARGIN
DO NOT WRITE IN THIS MARGIN
DO NOT WRITE IN THIS MARGIN
DO NOT WRITE IN THIS MARGIN
DO NOT WRITE IN THIS MARGIN

© Cambridge University Press & Assessment 2026

(c) Plot a graph of $\frac{1}{V}/\frac{1}{\text{V}}$ (y-axis) against R/Ω (x-axis). Start your axes at the origin (0,0).

Draw a best-fit straight line.



[4]

(d) Determine the gradient G of your line. Show all your working and indicate on the graph the values you use.

G = ... [1]

(e) Extend your line so that it meets the y-axis.

Record the intercept c that your line makes with the y-axis.

c = ... [1]

DO NOT WRITE IN THIS MARGIN
DO NOT WRITE IN THIS MARGIN
DO NOT WRITE IN THIS MARGIN
DO NOT WRITE IN THIS MARGIN
DO NOT WRITE IN THIS MARGIN

GradeMax

(f) The resistance R_X of resistor X can be calculated using the equation:

$$R_X = \frac{c}{G}.$$

Use your answers to **3(d)** and **3(e)** to calculate R_X.

Record your answer to the nearest ohm.

R_X = ... Ω [1]

[Total: 11]

DO NOT WRITE IN THIS MARGIN
DO NOT WRITE IN THIS MARGIN
DO NOT WRITE IN THIS MARGIN
DO NOT WRITE IN THIS MARGIN
DO NOT WRITE IN THIS MARGIN

© Cambridge University Press & Assessment 2026

GradeMax

DO NOT WRITE IN THIS MARGIN
DO NOT WRITE IN THIS MARGIN
DO NOT WRITE IN THIS MARGIN
DO NOT WRITE IN THIS MARGIN
DO NOT WRITE IN THIS MARGIN

Turn over

© Cambridge University Press & Assessment 2026

4 A student:

- fills a tall glass cylinder with oil
- holds a small metal ball some distance above the surface of the oil
- releases the ball from rest.

The student investigates the time *t* taken for the metal ball to fall between two lines marked on the side of the cylinder.

Plan an experiment to investigate how **one** variable affects the time *t* for this oil.

The arrangement of the apparatus is shown in Figure 4.1.

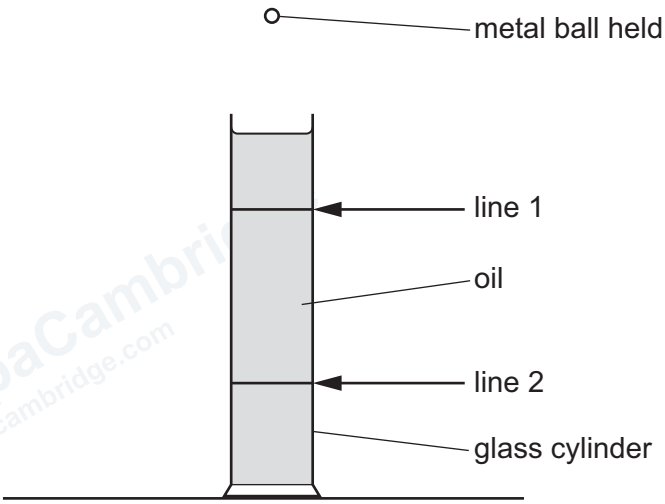

Figure 4.1

The apparatus available includes:

- a glass cylinder containing oil
- a selection of different metal balls
- a ruler.

In your plan:

- state the **one** variable you have chosen to investigate
- name any other apparatus needed
- give a brief description of the method, including what you will measure
- state the key variables to be kept constant
- draw a table, with column headings, to show how to display the readings (you are **not** required to enter any readings in the table)
- explain how to use the readings to reach a conclusion.

DO NOT WRITE IN THIS MARGIN
DO NOT WRITE IN THIS MARGIN
DO NOT WRITE IN THIS MARGIN
DO NOT WRITE IN THIS MARGIN
DO NOT WRITE IN THIS MARGIN

GradeMax

DO NOT WRITE IN THIS MARGIN
DO NOT WRITE IN THIS MARGIN
DO NOT WRITE IN THIS MARGIN
DO NOT WRITE IN THIS MARGIN
DO NOT WRITE IN THIS MARGIN

.....

.....

.....

.....

.....

.....

.....

.....

.....

.....

.....

.....

.....

.....

.....

.....

.....

..... [7]

PapaCambridge papacambridge.com

GradeMax

BLANK PAGE

DO NOT WRITE IN THIS MARGIN
DO NOT WRITE IN THIS MARGIN
DO NOT WRITE IN THIS MARGIN
DO NOT WRITE IN THIS MARGIN
DO NOT WRITE IN THIS MARGIN

Permission to reproduce items where third-party owned material protected by copyright is included has been sought and cleared where possible. Every reasonable effort has been made by the publisher (Cambridge University Press & Assessment) to trace copyright holders, but if any items requiring clearance have unwittingly been included, the publisher will be pleased to make amends at the earliest possible opportunity.

To avoid the issue of disclosure of answer-related information to candidates, all copyright acknowledgements are reproduced online in our Copyright Acknowledgements Booklet. This is produced for each series of examinations and is freely available to download at www.cambridgeinternational.org after the live examination series.

Cambridge International Education is the name of our awarding body and a part of Cambridge University Press & Assessment, which is a department of the University of Cambridge.

© Cambridge University Press & Assessment 2026