GradeMax

Please check the examination details below before entering your candidate information

Candidate surname	Other names

Centre Number | Candidate Number

Pearson Edexcel International Advanced Level

Time 1 hour 20 minutes

Paper reference **WCH16/01**

Chemistry

International Advanced Level
UNIT 6: Practical Skills in Chemistry II

You must have:
Scientific calculator

Total Marks

Instructions

- Use **black** ink or **black** ball-point pen.
- **Fill in the boxes** at the top of this page with your name, centre number and candidate number.
- Answer **all** questions.
- Answer the questions in the spaces provided – *there may be more space than you need.*

Information

- The total mark for this paper is 50.
- The marks for **each** question are shown in brackets – *use this as a guide as to how much time to spend on each question.*
- You will be assessed on your ability to organise and present information, ideas, descriptions and arguments clearly and logically, including your use of grammar, punctuation and spelling.
- A Periodic Table is printed on the back cover of this paper.

Advice

- Read each question carefully before you start to answer it.
- Show all your working in calculations and include units where appropriate.
- Check your answers if you have time at the end.

Turn over ▶

P67132A

©2021 Pearson Education Ltd.

E:1/1/1/1/1/

P 6 7 1 3 2 A 0 1 1 6

Pearson

Answer ALL questions. Write your answers in the spaces provided.

1 This question is about copper and some of its compounds.

(a) Two tests were carried out on separate samples of an aqueous solution of copper(II) sulfate.

(i) **Test 1**

A few drops of aqueous sodium hydroxide were added to a sample of the copper(II) sulfate solution.

State what you would see.

(1)

.....

(ii) **Test 2**

A few drops of concentrated hydrochloric acid were added to another sample of the copper(II) sulfate solution.
More of the concentrated hydrochloric acid was added until it was present in excess.

Describe the changes that would be observed during this test.

(2)

.....

.....

.....

.....

(b) Describe a test, and its positive result, to confirm the presence of the sulfate ion in another sample of the copper(II) sulfate solution.

(2)

.....

.....

.....

.....

.....

DO NOT WRITE IN THIS AREA
DO NOT WRITE IN THIS AREA
DO NOT WRITE IN THIS AREA

DO NOT WRITE IN THIS AREA
DO NOT WRITE IN THIS AREA
DO NOT WRITE IN THIS AREA

(c) An electrochemical cell was made from the electrode systems represented by these half-equations:

$$Cu^{2+}(aq) + 2e^- \rightleftharpoons Cu(s) \qquad E^{\ominus} = +0.34V$$

$$Fe^{3+}(aq) + e^- \rightleftharpoons Fe^{2+}(aq) \qquad E^{\ominus} = +0.77V$$

(i) Calculate $E^{\ominus}_{cell}$ for the electrochemical cell.

(1)

(ii) A student drew a diagram of an experiment to measure the standard emf of the cell.

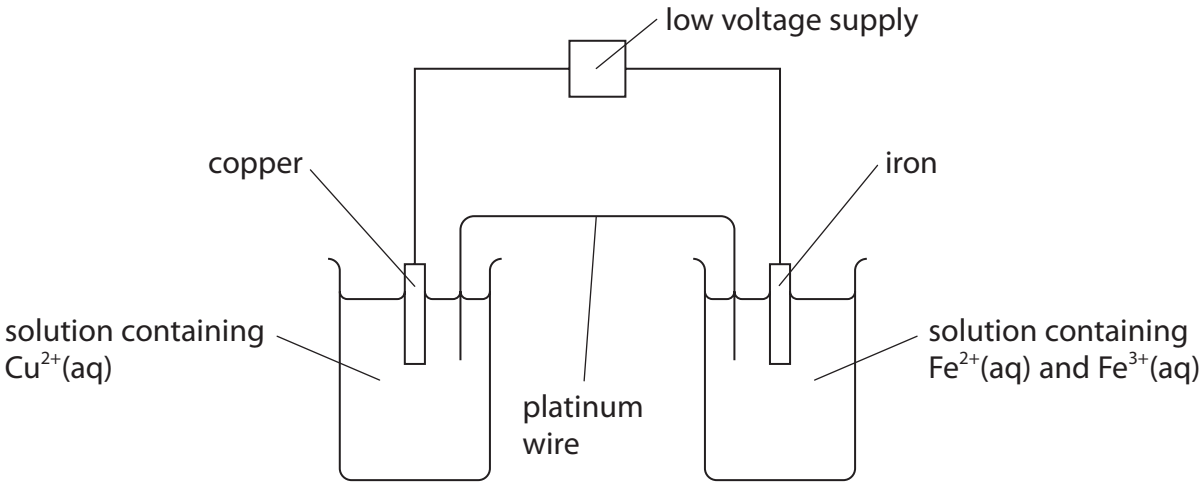

Identify three mistakes in this diagram and the changes needed to correct them.

Assume that standard conditions were used.

(3)

Mistake	Change needed to correct mistake

(d) Brass is an alloy of copper and zinc.
A student determined the percentage of copper in a sample of brass.

Procedure

- weigh the sample of brass
- place the brass in a beaker and add concentrated nitric acid until all the brass dissolves
- transfer the solution and washings to a 250.0 cm^3 volumetric flask
- make the solution up to the mark with distilled water and mix well
- pipette 25.0 cm^3 of the solution into a conical flask
- neutralise the excess nitric acid in the solution
- add 10 cm^3 of potassium iodide solution (an excess) to the conical flask
- titrate the iodine produced with 0.100 mol dm^{-3} sodium thiosulfate solution using starch indicator
- repeat the titration until concordant titres are obtained.

(i) Copper and zinc both react with concentrated nitric acid to form the metal nitrates, nitrogen dioxide and water.

Write the balanced equation for the reaction of zinc with concentrated nitric acid.
State symbols are not required.

(1)

(ii) Name the most suitable piece of apparatus to measure the 10 cm^3 of potassium iodide solution.

(1)

.....

(iii) State at what point in the titration the starch solution should be added.

(1)

.....

.....

DO NOT WRITE IN THIS AREA
DO NOT WRITE IN THIS AREA
DO NOT WRITE IN THIS AREA

DO NOT WRITE IN THIS AREA
DO NOT WRITE IN THIS AREA
DO NOT WRITE IN THIS AREA

(iv) Only Cu^{2+} ions in the solution react with the aqueous potassium iodide.

$$2Cu^{2+} + 4I^- \rightarrow 2CuI + I_2$$

The iodine reacts with sodium thiosulfate solution.

$$2S_2O_3^{2-} + I_2 \rightarrow S_4O_6^{2-} + 2I^-$$

Results

Mass of brass sample = 3.90 g

Mean titre of 0.100 mol dm^{-3} sodium thiosulfate solution = 28.60 cm^3

Calculate the percentage, by mass, of copper in this sample of brass.
Give your answer to an appropriate number of significant figures.

(5)

(Total for Question 1 = 17 marks)



2 Two organic compounds, **A** and **B**, are colourless liquids.

Each compound contains only **one** functional group.

(a) Two tests were carried out on **A**. The observation for each test was recorded in the table.

(i) Complete the statements in the inference column by writing the names or formulae of the functional groups.

(2)

Test	Observation	Inference
Test 1 A few drops of **A** were added to 2 cm^3 of a solution of 2,4-dinitrophenylhydrazine (Brady's reagent)	An orange precipitate formed	**A** could contain ..... or .....
Test 2 A few drops of **A** were added to 2 cm^3 of Fehling's solution The mixture was warmed in a water bath	A red precipitate formed	The functional group present in **A** is .....

(ii) Give the name or formula of the red precipitate formed in **Test 2**.

(1)

.....

DO NOT WRITE IN THIS AREA
DO NOT WRITE IN THIS AREA
DO NOT WRITE IN THIS AREA

DO NOT WRITE IN THIS AREA
DO NOT WRITE IN THIS AREA
DO NOT WRITE IN THIS AREA

(b) A simplified mass spectrum of **A** is shown.

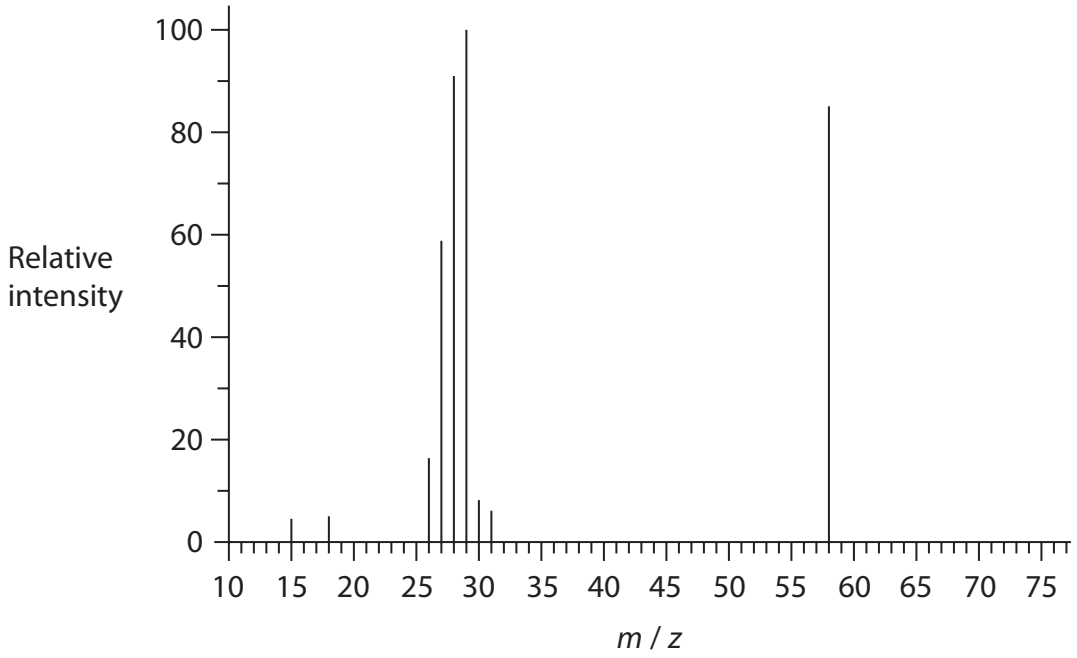

(i) Give the formula of **one** of the ions responsible for the peak at $m / z = 29$.

(1)

.....

(ii) **A** contains one functional group.

Give the m / z value of the molecular ion and the structure of **A**.

(1)

m / z value of the molecular ion .....

structure of **A**

(c) Two tests were carried out on **B**.

(i) Complete the statements in the observation and inference columns.

(2)

Test	Observation	Inference
Test 3 2 drops of **B** were dissolved in 2 cm^3 of water A few drops of Universal Indicator were added to the solution	The colour of the mixture was	The solution is alkaline
Test 4 **B** was added drop by drop to aqueous copper(II) sulfate until **B** was present in excess	A pale blue precipitate formed with the first few drops of **B** This dissolved to form a deep blue solution when excess **B** was added	The **name** of the functional group in **B** is .....

(ii) **B** has a molar mass of 59 g mol^{-1}.

Suggest a structure for **B**.

(1)

(Total for Question 2 = 8 marks)

DO NOT WRITE IN THIS AREA
DO NOT WRITE IN THIS AREA
DO NOT WRITE IN THIS AREA

DO NOT WRITE IN THIS AREA
DO NOT WRITE IN THIS AREA
DO NOT WRITE IN THIS AREA

BLANK PAGE

3 A student carried out an experiment to determine the enthalpy change when solid lithium chloride, LiCl, dissolved in water to form a solution.

Procedure

Step **1** Use a pipette to place 25.0 cm^3 of distilled water into a polystyrene cup.

Step **2** Measure and record the initial temperature of the water.

Step **3** Add 2.12 g of lithium chloride to the water.

Step **4** Stir the mixture and record the highest temperature reached.

(a) Give a reason why a polystyrene cup was used instead of a glass beaker in Step **1**.

(1)

.....

.....

(b) The temperature rise was 12.5 °C.

Calculate the enthalpy change for the formation of this solution of lithium chloride.

Include a sign and units in your answer.

[Assume: specific heat capacity of the solution = 4.18 $J\,g^{-1}\,°C^{-1}$
density of the solution = 1.00 $g\,cm^{-3}$]

(3)

DO NOT WRITE IN THIS AREA
DO NOT WRITE IN THIS AREA
DO NOT WRITE IN THIS AREA

DO NOT WRITE IN THIS AREA
DO NOT WRITE IN THIS AREA
DO NOT WRITE IN THIS AREA

(c) The thermometer used to measure the temperature change had an uncertainty of ±0.25 °C for each measurement.

Calculate the percentage uncertainty in the temperature **change** in this experiment.

(1)

(d) The temperature rise in this experiment was lower than expected, due to heat loss to the surroundings.

Describe changes to the procedure that would give a more accurate temperature rise.

Include the use of a stopwatch and details of a graph you would plot.

(5)

(Total for Question 3 = 10 marks)

4 This question is about the alkaline hydrolysis of an ester, **X**.

X is an alkyl benzoate and can be represented by the formula C_6H_5COOR, where R is the alkyl group.

The equation for the hydrolysis is

$$C_6H_5COOR + NaOH \rightarrow C_6H_5COONa + ROH$$

Procedure

Step **1** Measure 5.0 cm^3 of **X** and pour it into a pear-shaped flask. Add 25 cm^3 (an excess) of aqueous sodium hydroxide solution and a few anti-bumping granules.

Step **2** Heat the flask and contents under reflux for 20 minutes.

Step **3** Allow the apparatus to cool and then rearrange it for distillation. Distil the mixture and collect about 2 cm^3 of the alcohol ROH.

Step **4** Allow the pear-shaped flask to cool, pour the contents into a beaker and add excess dilute hydrochloric acid.
Impure benzoic acid forms as crystals in the mixture.

Step **5** Recrystallise the benzoic acid using water as the solvent.

Step **6** Weigh the dry crystals and determine their melting temperature.

DO NOT WRITE IN THIS AREA
DO NOT WRITE IN THIS AREA
DO NOT WRITE IN THIS AREA

DO NOT WRITE IN THIS AREA
DO NOT WRITE IN THIS AREA
DO NOT WRITE IN THIS AREA

(a) A student drew a diagram of the apparatus set up for distillation in Step **3**.
There are three errors in the diagram.
Assume the apparatus is clamped correctly and an appropriate heat source is used.

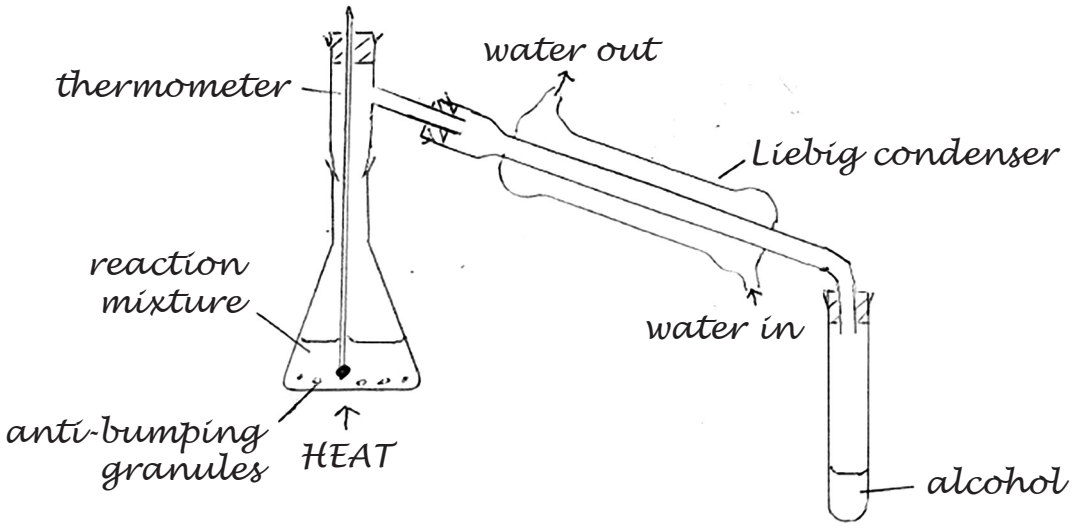

Identify the three errors and how they should be corrected.

(3)

(b) The distillate collected in Step **3** is the alcohol ROH.

Describe a **chemical** test, and its positive result, to show the presence of an –OH group in **any** alcohol.

(2)

(c) (i) Write an equation for the reaction taking place in Step **4**.
Use structural formulae for the organic substances. State symbols are not required.

(1)

(ii) State what should be done to separate the benzoic acid from the mixture produced in Step **4**, before carrying out Step **5**.

(1)

(d) Describe the **first** stage in the recrystallisation process in Step **5**.

(1)

(e) The melting temperature of pure benzoic acid is 122 °C.

State **two** ways in which the melting temperature changes if the benzoic acid is **not** pure.

(2)

DO NOT WRITE IN THIS AREA
DO NOT WRITE IN THIS AREA
DO NOT WRITE IN THIS AREA

DO NOT WRITE IN THIS AREA
DO NOT WRITE IN THIS AREA
DO NOT WRITE IN THIS AREA

(f) The molar mass of **X**, C_6H_5COOR, is 178 g mol^{-1}.

(i) Deduce the formula of the alkyl group, R.

(1)

(ii) Use your answer to (f)(i) to draw the structures of the four possible alcohols, ROH.

(2)

(iii) The part of the ^{13}C NMR spectrum of **X** corresponding to the R group contains only two peaks.

Deduce the structure of **X**.

(2)

(Total for Question 4 = 15 marks)

TOTAL FOR PAPER = 50 MARKS

The Periodic Table of Elements

1	2											3	4	5	6	7	0 (8)
							1.0 H hydrogen 1										(18) 4.0 He helium 2
(1)	(2)		Key									(13)	(14)	(15)	(16)	(17)	
6.9 Li lithium 3	9.0 Be beryllium 4		relative atomic mass atomic symbol name atomic (proton) number									10.8 B boron 5	12.0 C carbon 6	14.0 N nitrogen 7	16.0 O oxygen 8	19.0 F fluorine 9	20.2 Ne neon 10
23.0 Na sodium 11	24.3 Mg magnesium 12	(3)	(4)	(5)	(6)	(7)	(8)	(9)	(10)	(11)	(12)	27.0 Al aluminium 13	28.1 Si silicon 14	31.0 P phosphorus 15	32.1 S sulfur 16	35.5 Cl chlorine 17	39.9 Ar argon 18
39.1 K potassium 19	40.1 Ca calcium 20	45.0 Sc scandium 21	47.9 Ti titanium 22	50.9 V vanadium 23	52.0 Cr chromium 24	54.9 Mn manganese 25	55.8 Fe iron 26	58.9 Co cobalt 27	58.7 Ni nickel 28	63.5 Cu copper 29	65.4 Zn zinc 30	69.7 Ga gallium 31	72.6 Ge germanium 32	74.9 As arsenic 33	79.0 Se selenium 34	79.9 Br bromine 35	83.8 Kr krypton 36
85.5 Rb rubidium 37	87.6 Sr strontium 38	88.9 Y yttrium 39	91.2 Zr zirconium 40	92.9 Nb niobium 41	95.9 Mo molybdenum 42	[98] Tc technetium 43	101.1 Ru ruthenium 44	102.9 Rh rhodium 45	106.4 Pd palladium 46	107.9 Ag silver 47	112.4 Cd cadmium 48	114.8 In indium 49	118.7 Sn tin 50	121.8 Sb antimony 51	127.6 Te tellurium 52	126.9 I iodine 53	131.3 Xe xenon 54
132.9 Cs caesium 55	137.3 Ba barium 56	138.9 La* lanthanum 57	178.5 Hf hafnium 72	180.9 Ta tantalum 73	183.8 W tungsten 74	186.2 Re rhenium 75	190.2 Os osmium 76	192.2 Ir iridium 77	195.1 Pt platinum 78	197.0 Au gold 79	200.6 Hg mercury 80	204.4 Tl thallium 81	207.2 Pb lead 82	209.0 Bi bismuth 83	[209] Po polonium 84	[210] At astatine 85	[222] Rn radon 86
[223] Fr francium 87	[226] Ra radium 88	[227] Ac* actinium 89	[261] Rf rutherfordium 104	[262] Db dubnium 105	[266] Sg seaborgium 106	[264] Bh bohrium 107	[277] Hs hassium 108	[268] Mt meitnerium 109	[271] Ds damstadtium 110	[272] Rg roentgenium 111							

Elements with atomic numbers 112-116 have been reported but not fully authenticated

* Lanthanide series

* Actinide series

140 Ce cerium 58	141 Pr praseodymium 59	144 Nd neodymium 60	[147] Pm promethium 61	150 Sm samarium 62	152 Eu europium 63	157 Gd gadolinium 64	159 Tb terbium 65	163 Dy dysprosium 66	165 Ho holmium 67	167 Er erbium 68	169 Tm thulium 69	173 Yb ytterbium 70	175 Lu lutetium 71
232 Th thorium 90	[231] Pa protactinium 91	238 U uranium 92	[237] Np neptunium 93	[242] Pu plutonium 94	[243] Am americium 95	[247] Cm curium 96	[245] Bk berkelium 97	[251] Cf californium 98	[254] Es einsteinium 99	[253] Fm fermium 100	[256] Md mendelevium 101	[254] No nobelium 102	[257] Lr lawrencium 103

DO NOT WRITE IN THIS AREA DO NOT WRITE IN THIS AREA DO NOT WRITE IN THIS AREA

GradeMax