GradeMax

Please check the examination details below before entering your candidate information

Candidate surname	Other names

Pearson Edexcel
International Advanced Level

Centre Number | Candidate Number

Tuesday 15 October 2019

Morning (Time: 1 hour 30 minutes) | Paper Reference **WPH12/01**

Physics

International Advanced Subsidiary
Unit 2: Waves and Electricity

You must have:
Scientific calculator, Ruler

Total Marks

Instructions

- Use **black** ink or ball-point pen.
- **Fill in the boxes** at the top of this page with your name, centre number and candidate number.
- Answer **all** questions.
- Answer the questions in the spaces provided
  – *there may be more space than you need.*
- **Show all your working out in calculations and include units where appropriate.**

Information

- The total mark for this paper is 80.
- The marks for **each** question are shown in brackets
  – *use this as a guide as to how much time to spend on each question.*
- In questions marked with an **asterisk** (*), marks will be awarded for your ability to structure your answer logically showing how the points that you make are related or follow on from each other where appropriate.
- The list of data, formulae and relationships is printed at the end of this booklet.

Advice

- Read each question carefully before you start to answer it.
- Try to answer every question.
- Check your answers if you have time at the end.

Turn over ▶

P62787A

©2019 Pearson Education Ltd.

1/1/1/1/1/

P 6 2 7 8 7 A 0 1 3 2

Pearson

SECTION A

Answer ALL questions.

For questions 1–10 select one answer from A to D and put a cross in the box ☒.
If you change your mind, put a line through the box ☒ and then mark your new answer with a cross ☒.

1 The resistance of some electrical components decreases as the applied potential difference increases.

Which row of the table contains two components that behave in this way?

☒	**A**	diode	ohmic conductor
☒	**B**	ohmic conductor	filament lamp
☒	**C**	negative temperature coefficient thermistor	diode
☒	**D**	negative temperature coefficient thermistor	filament lamp

(Total for Question 1 = 1 mark)

DO NOT WRITE IN THIS AREA
DO NOT WRITE IN THIS AREA
DO NOT WRITE IN THIS AREA

DO NOT WRITE IN THIS AREA
DO NOT WRITE IN THIS AREA
DO NOT WRITE IN THIS AREA

2 The circuit shows a resistor of resistance R connected to a cell of e.m.f. $\mathcal{E}$ and internal resistance r. When the current in the circuit is I the terminal potential difference is V.

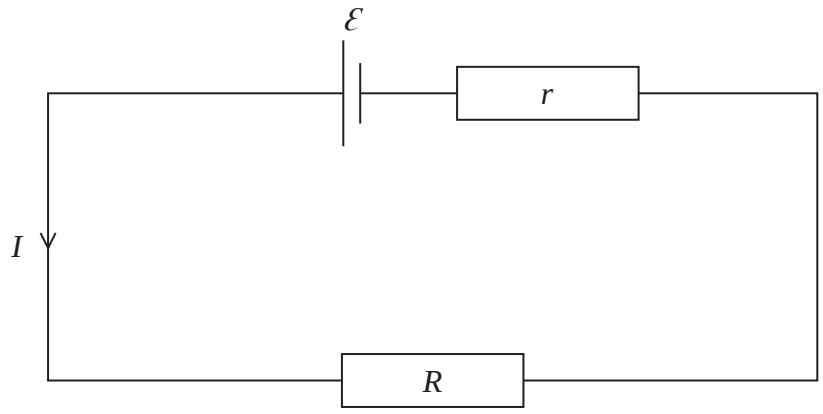

Which of the following is an expression for the power P dissipated in the internal resistance of the cell?

☒ **A** $P = I(\mathcal{E} - V)$

☒ **B** $P = I^2 R$

☒ **C** $P = I\mathcal{E}$

☒ **D** $P = V^2/r$

(Total for Question 2 = 1 mark)

3 Light travels at a speed of $2.3 \times 10^8\,\text{m s}^{-1}$ in water and $2.0 \times 10^8\,\text{m s}^{-1}$ in glass. The refractive index of glass is 1.5

Which of the following expressions can be used to determine the refractive index of water?

☒ **A** $\dfrac{(2.3 \times 10^8) \times 1.5}{(2.0 \times 10^8)}$

☒ **B** $\dfrac{(2.0 \times 10^8) \times 1.5}{(2.3 \times 10^8)}$

☒ **C** $\dfrac{(2.0 \times 10^8)}{(2.3 \times 10^8) \times 1.5}$

☒ **D** $\dfrac{(2.3 \times 10^8)}{(2.0 \times 10^8) \times 1.5}$

(Total for Question 3 = 1 mark)

4 Ultraviolet light is incident on a metal surface and photoelectrons are released.

The number of photoelectrons released per second is N and the maximum kinetic energy of the released electrons is E_k.

Which of the following pairs of graphs shows how N and E_k vary with the intensity I of the incident light?

☒ **A**

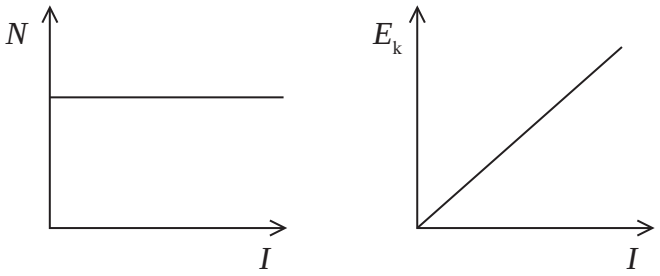

☒ **B**

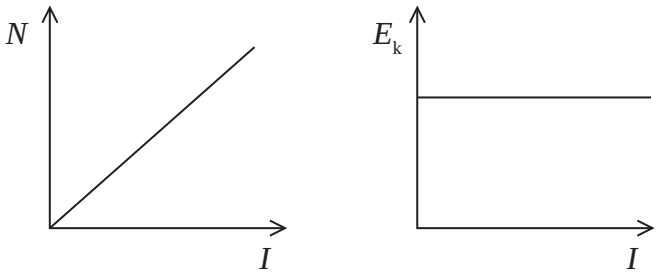

☒ **C**

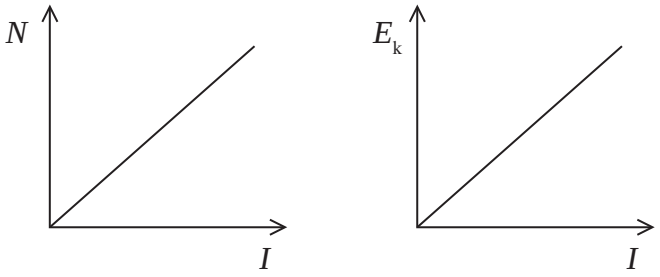

☒ **D**

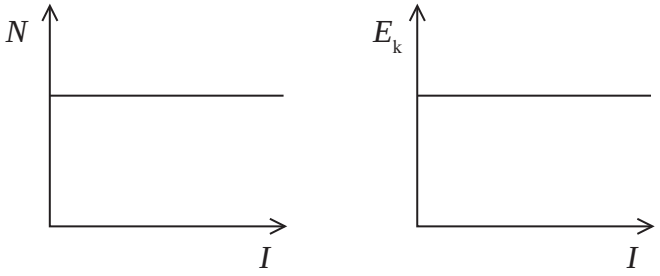

(Total for Question 4 = 1 mark)

DO NOT WRITE IN THIS AREA
DO NOT WRITE IN THIS AREA
DO NOT WRITE IN THIS AREA

DO NOT WRITE IN THIS AREA
DO NOT WRITE IN THIS AREA
DO NOT WRITE IN THIS AREA

5 Wire P and wire Q are connected in series across a battery.
Wire P has a charge carrier density n and a diameter d.
Wire Q has a charge carrier density $2n$ and a diameter $2d$.
The drift velocity of the charge carriers in wire P is v.

Which of the following is the drift velocity of the charge carriers in wire Q?

☒ **A** $\frac{v}{8}$

☒ **B** $\frac{v}{4}$

☒ **C** v

☒ **D** $4v$

(Total for Question 5 = 1 mark)

6 Which of the following can **not** be demonstrated in experiments using sound waves?

☒ **A** diffraction

☒ **B** polarisation

☒ **C** refraction

☒ **D** superposition

(Total for Question 6 = 1 mark)

7 Solar panels are devices that use sunlight as a source of energy to generate electricity.
A solar panel has a surface area of $1.54\,m^2$. The intensity of radiation incident on the Earth's surface is $1050\,W\,m^{-2}$. The manufacturer states that the maximum output power of the solar panel is 250 W.

Which of the following could be used to calculate the maximum efficiency of the solar panel?

☒ **A** $\frac{250 \times 1.54}{1050}$

☒ **B** $\frac{1050}{250 \times 1.54}$

☒ **C** $\frac{1050 \times 1.54}{250}$

☒ **D** $\frac{250}{1050 \times 1.54}$

(Total for Question 7 = 1 mark)

8 Which of the following graphs shows how power P dissipated by an ohmic conductor varies with potential difference V across the conductor?

☒ **A**

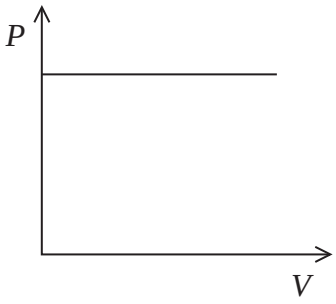

☒ **B**

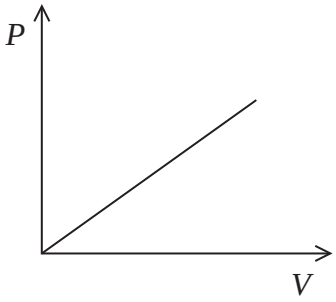

☒ **C**

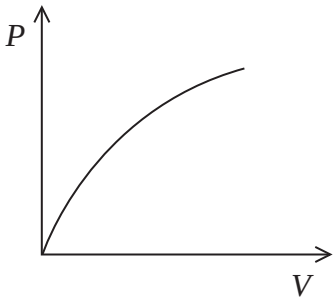

☒ **D**

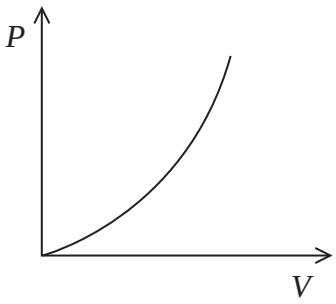

(Total for Question 8 = 1 mark)

DO NOT WRITE IN THIS AREA
DO NOT WRITE IN THIS AREA
DO NOT WRITE IN THIS AREA

DO NOT WRITE IN THIS AREA
DO NOT WRITE IN THIS AREA
DO NOT WRITE IN THIS AREA

9 Two waves from the same source travel along different paths and then meet at a point P. The phase difference between the waves at P is 1.5π radians.

Which of the following is a possible path difference that could result in this phase difference being produced at P?

☒ **A** $\frac{3\lambda}{2}$

☒ **B** $\frac{7\lambda}{4}$

☒ **C** 3λ

☒ **D** $\frac{7\lambda}{2}$

(Total for Question 9 = 1 mark)

10 When laser light is shone through a diffraction grating a series of maxima is formed on a screen.

Assuming all other factors remain constant, which of the following changes would increase the distance between adjacent maxima?

☒ **A** Decreasing the distance between the diffraction grating and the screen.

☒ **B** Decreasing the distance between the lines on the diffraction grating.

☒ **C** Decreasing the intensity of the laser light used.

☒ **D** Decreasing the wavelength of the laser light used.

(Total for Question 10 = 1 mark)

TOTAL FOR SECTION A = 10 MARKS

SECTION B

Answer ALL questions in the spaces provided.

11 The diagram shows some of the energy levels for an atom of hydrogen.

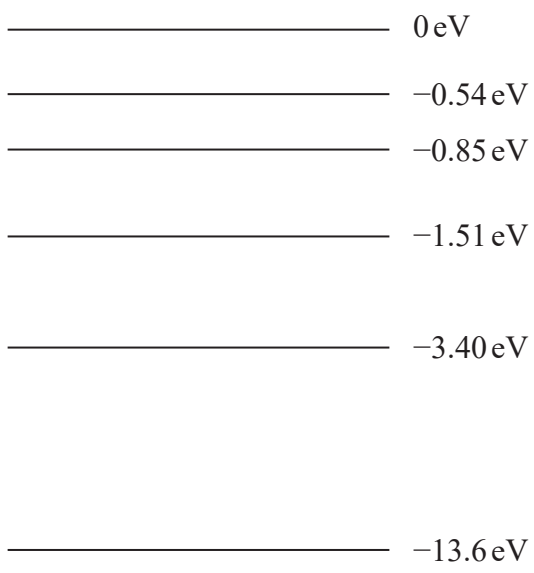

Determine the transition between energy levels that would result in the release of a photon with a frequency of 7.48×10^{13} Hz.

(3)

Transition from ..... eV to ..... eV

(Total for Question 11 = 3 marks)

DO NOT WRITE IN THIS AREA
DO NOT WRITE IN THIS AREA
DO NOT WRITE IN THIS AREA

DO NOT WRITE IN THIS AREA
DO NOT WRITE IN THIS AREA
DO NOT WRITE IN THIS AREA

12 A student is reading about the wave nature of electrons.

He writes a statement about wave-particle duality:

If every particle has a de Broglie wavelength, it should be possible for a moving car to have the same de Broglie wavelength as a fast moving electron, although the car would be moving very slowly.

(a) Determine whether the student's statement about the speed of the car is mathematically correct.

speed of electron = $1.5 \times 10^{7}\,\text{m s}^{-1}$
mass of car = 900 kg

(3)

(b) Suggest why the de Broglie wavelength is not a useful property for a car.

(1)

(Total for Question 12 = 4 marks)

13 The photograph shows an electric skateboard.



(Source: *www.digitaltrends.com*)

One particular type of electric skateboard uses an electric motor connected to a 22 V rechargeable lithium-ion battery. A fully-charged battery is able to pass 36,000 C of charge through the circuit and will allow continuous operation of the skateboard for 40 minutes.

(a) Calculate the total energy stored in a fully-charged lithium-ion battery.

(2)

.....

.....

.....

.....

Total energy stored = ...

DO NOT WRITE IN THIS AREA
DO NOT WRITE IN THIS AREA
DO NOT WRITE IN THIS AREA

DO NOT WRITE IN THIS AREA
DO NOT WRITE IN THIS AREA
DO NOT WRITE IN THIS AREA

(b) The electric skateboard travels at a speed of 16 kilometres per hour.

(i) Calculate the time taken for the electric skateboard to travel 2.0 m.

(2)

Time taken = ...

(ii) While the electric skateboard is in use, the battery provides a constant current.

Calculate the number of electrons that flow past a point in the circuit during the time taken for the electric skateboard to travel 2.0 m.

(3)

Number of electrons = ...

(Total for Question 13 = 7 marks)

14 The circuit shown includes a fixed resistor and a negative temperature coefficient thermistor.

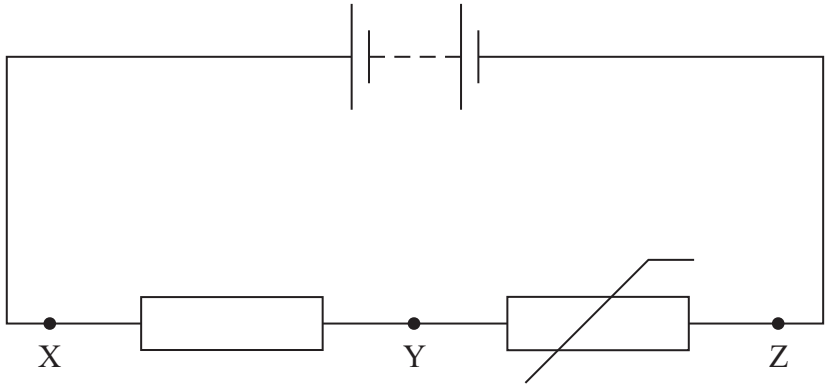

A potential divider circuit can be created by making connections to a secondary circuit across the resistor (XY) or across the thermistor (YZ). As the temperature changes, the potential differences (p.d.) across XY and YZ both change.

Such a circuit can be used to operate an air conditioning unit in a hot classroom in order to keep the classroom cool. The air conditioning unit starts operating when the p.d. in the secondary circuit exceeds a certain value.

*(a) Explain how the circuit should be set up to keep the classroom cool. Your answer should include details of how a negative temperature coefficient thermistor works, in terms of particles.

(6)

DO NOT WRITE IN THIS AREA
DO NOT WRITE IN THIS AREA
DO NOT WRITE IN THIS AREA

DO NOT WRITE IN THIS AREA
DO NOT WRITE IN THIS AREA
DO NOT WRITE IN THIS AREA

(b) The thermistor in the circuit is replaced with a light dependent resistor (LDR) and a voltmeter placed across YZ as shown.

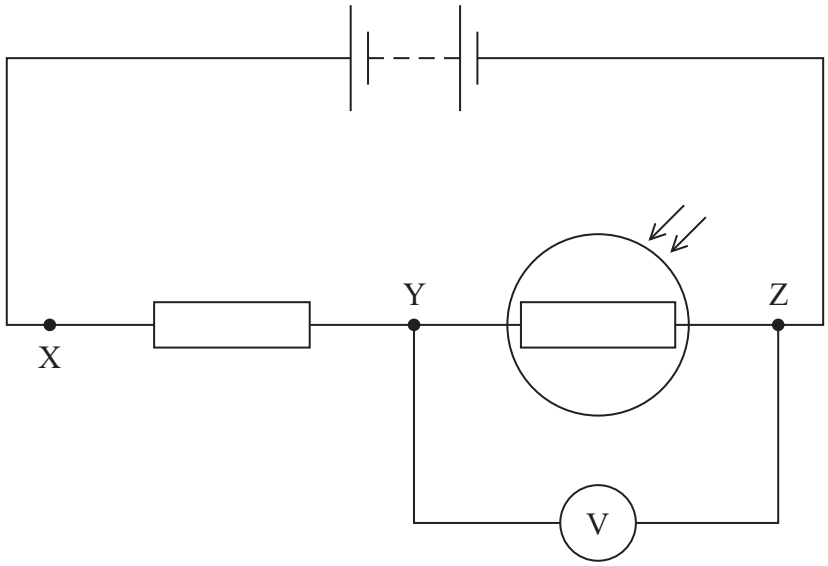

The fixed resistor has a resistance of 1.20 kΩ. The battery has an e.m.f. of 12.0 V and negligible internal resistance. Initially the circuit is set up in a darkened room, and the voltmeter displays a reading of 4.71 V. When a light is shone directly onto the LDR, the voltmeter reads 2.16 V. Calculate the change in resistance of the LDR when the light is shone onto it.

(3)

Change in resistance of the LDR = ...

(Total for Question 14 = 9 marks)

15 A student is planning an experiment to determine a value for the resistivity of a metal in the form of a wire, by a graphical method.

(a) State the physical quantities she should measure, suggesting a suitable measuring instrument for each quantity.

(3)

(b) Describe how she should use her measurements to determine an accurate value for the resistivity of the wire using a graphical method.

(3)

(Total for Question 15 = 6 marks)

DO NOT WRITE IN THIS AREA
DO NOT WRITE IN THIS AREA
DO NOT WRITE IN THIS AREA

DO NOT WRITE IN THIS AREA
DO NOT WRITE IN THIS AREA
DO NOT WRITE IN THIS AREA

BLANK PAGE

16 An Aeolian harp is a stringed musical instrument that is 'played' by the wind. An Aeolian harp is shown in the photograph.

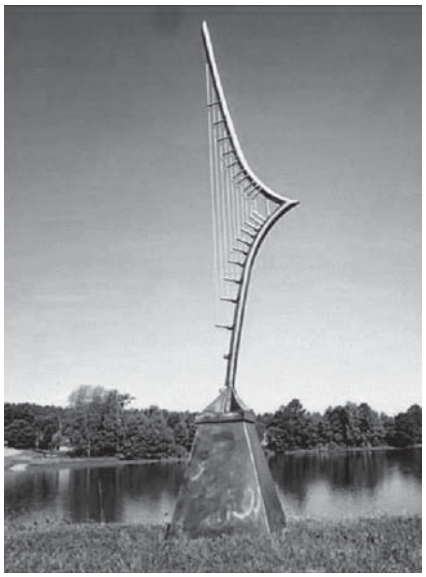

(Source: *www.youtube.com*)

As air passes the strings, it forces them to vibrate, creating stationary waves on the strings.

(a) Explain how stationary waves are formed on the strings.

(2)

.....

.....

.....

.....

(b) When the strings of an Aeolian harp vibrate, the frequency f of the string vibrations is given by the equation

$$f = \frac{Ku}{d}$$

where u is the speed of the moving air, d is the diameter of the string and K is a constant.

(i) Show that the constant K has no units.

(2)

.....

.....

.....

.....

DO NOT WRITE IN THIS AREA
DO NOT WRITE IN THIS AREA
DO NOT WRITE IN THIS AREA

DO NOT WRITE IN THIS AREA
DO NOT WRITE IN THIS AREA
DO NOT WRITE IN THIS AREA

(ii) A stationary wave is produced on a string of length L as shown.

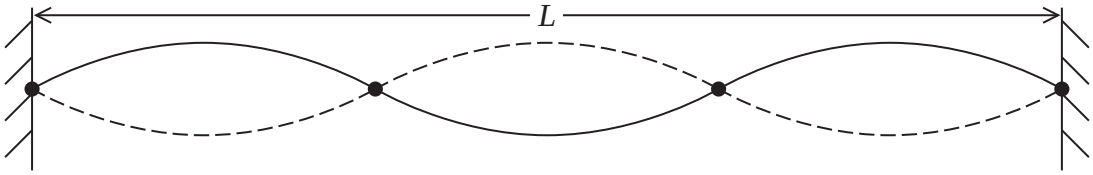

(Source: *hep.physics.indiana.edu*)

Calculate the speed of the air required to produce this stationary wave.

length of string = 0.33 m
diameter of string = 0.15 mm
tension in string = 63 N
mass per unit length of string = 0.58×10^{-3} kg m^{-1}
K = 0.20

(5)

Speed of the air = ...

(Total for Question 16 = 9 marks)

17 The rails of a railway track are usually made from steel, which can withstand the high stress of heavy trains. However, steel can develop cracks over time, leading to accidents if not repaired. Large cracks in a rail, such as the one shown in the photograph, are easy to observe.



(Source: *virginiabeach.legalexaminer.com*)

Ultrasound is commonly used to detect cracks that are too small to be seen.
An ultrasound transducer transmits a pulse of ultrasound into the top of the rail and records the time taken for the pulse to return. If this time is less than the time expected for the pulse to return from the bottom of the rail, a crack is present.

(a) State why an ultrasound pulse would be reflected by a crack in a rail.

(1)

.....

.....

.....

.....

DO NOT WRITE IN THIS AREA
DO NOT WRITE IN THIS AREA
DO NOT WRITE IN THIS AREA

DO NOT WRITE IN THIS AREA
DO NOT WRITE IN THIS AREA
DO NOT WRITE IN THIS AREA

(b) A data logger connected to the transducer produces a graph of ultrasound signal strength against time.

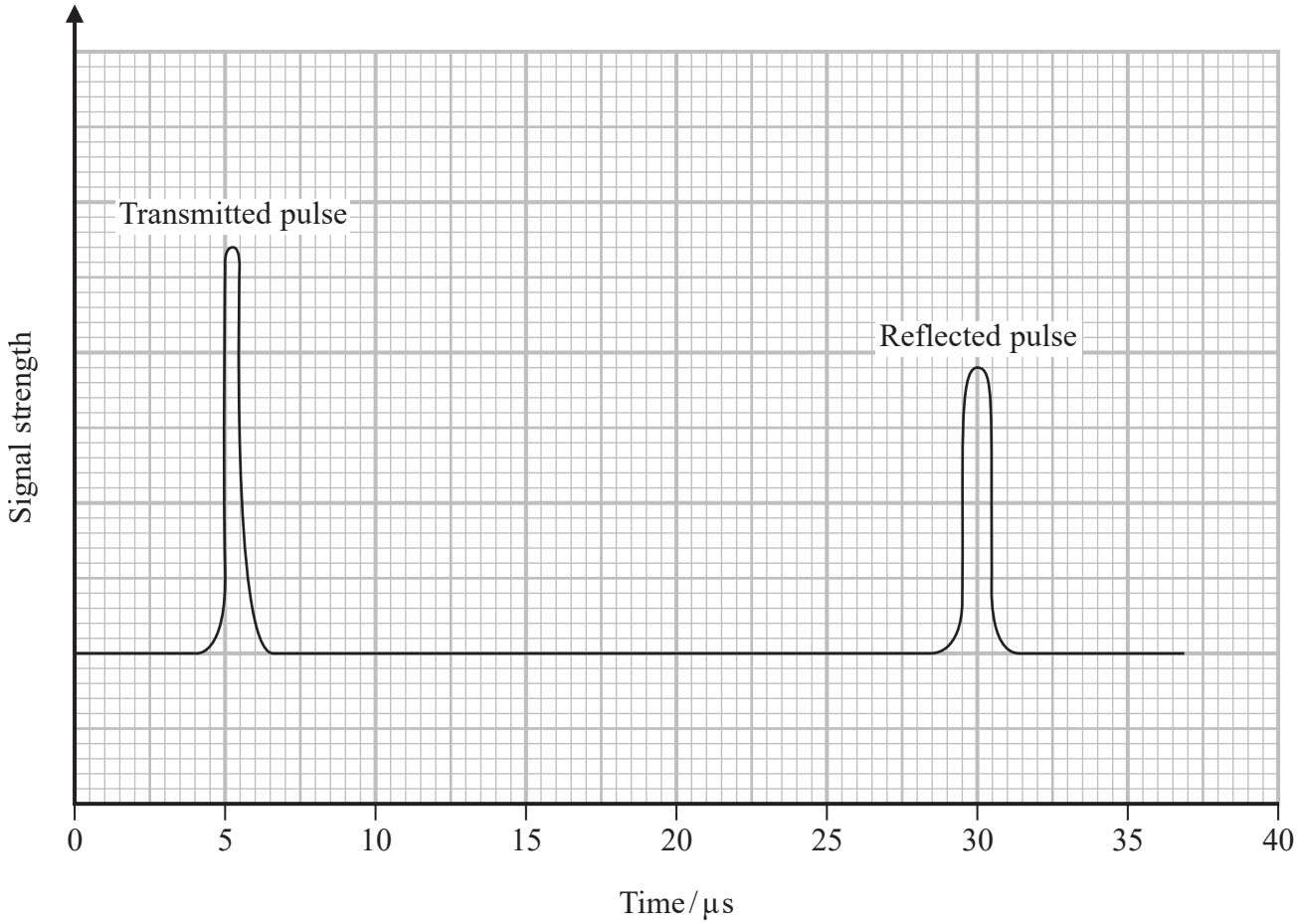

Determine whether the reflected pulse is from a crack in the rail or from the bottom of the rail.

depth of rail = 15 cm
speed of ultrasound in steel = 5800 m s^{-1}

(4)

(c) Suggest why this ultrasound method may not detect multiple cracks in a piece of rail.

(1)

.....

.....

(d) To detect cracks, transducers are attached to the wheels of special trains.

Explain why these trains must travel much more slowly than passenger trains.

(2)

.....

.....

.....

.....

(Total for Question 17 = 8 marks)

DO NOT WRITE IN THIS AREA
DO NOT WRITE IN THIS AREA
DO NOT WRITE IN THIS AREA

DO NOT WRITE IN THIS AREA
DO NOT WRITE IN THIS AREA
DO NOT WRITE IN THIS AREA

18 When an incident ray of light meets a boundary between air and glass, some of the light is reflected and some is refracted, as shown.

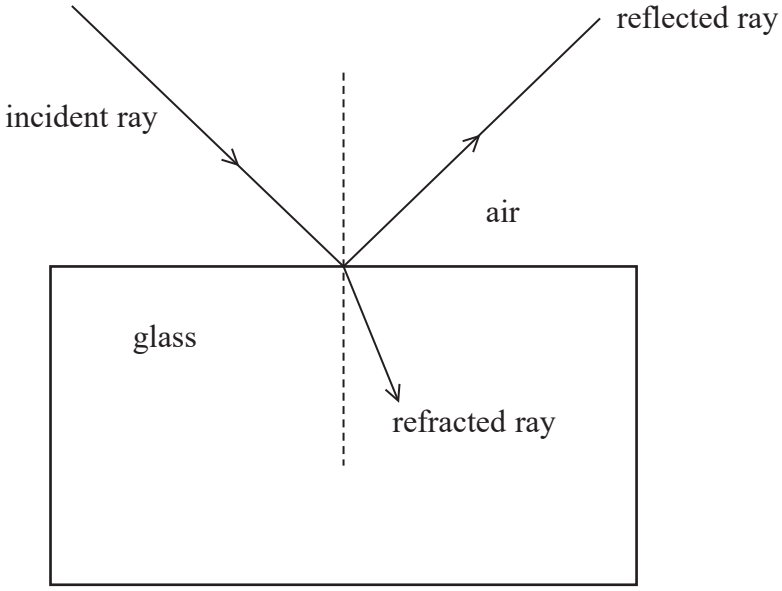

The reflected light is partially plane polarised.

(a) State what is meant by plane polarised.

(2)

.....

.....

.....

.....

(b) Deduce whether the refracted ray is unpolarised or partially plane polarised.

(2)

.....

.....

.....

.....

(c) At the Brewster angle θ_B, the reflected light is completely plane polarised.
This occurs when the reflected ray and the refracted ray are at right angles to each other, so $\theta_B + r = 90°$

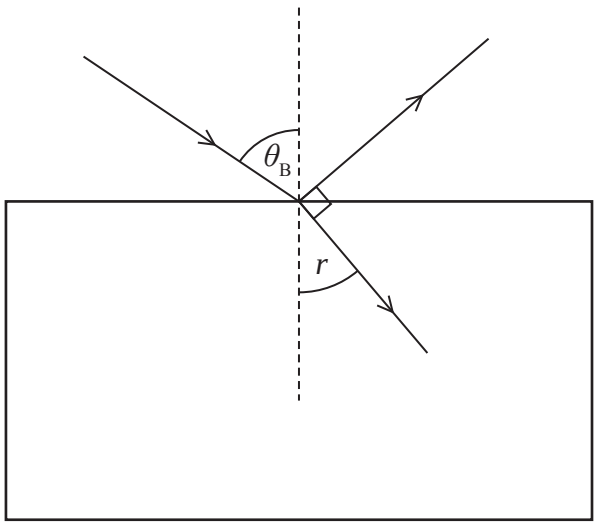

(i) Show that $\tan \theta_B = \frac{n_g}{n_a}$

n_a = refractive index of air
n_g = refractive index of glass

(3)

DO NOT WRITE IN THIS AREA
DO NOT WRITE IN THIS AREA
DO NOT WRITE IN THIS AREA

DO NOT WRITE IN THIS AREA
DO NOT WRITE IN THIS AREA
DO NOT WRITE IN THIS AREA

(ii) Calculate θ_B for light passing from air into glass.

refractive index of air = 1.00
refractive index of glass = 1.50

(2)

.....

.....

.....

.....

θ_B = ...

(iii) Different colours of visible light are refracted as they pass through a prism as shown.

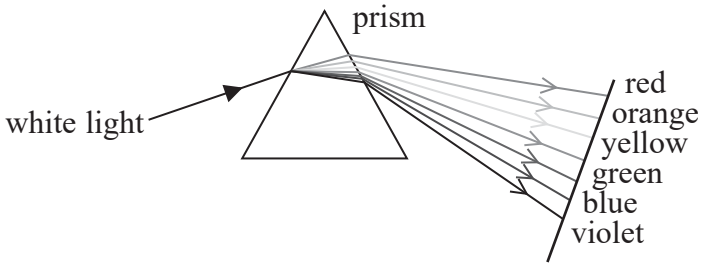

A student suggests that the Brewster angle for violet light would be smaller than that for red light, as violet is refracted more than red.

Criticise this suggestion.

(2)

.....

.....

.....

.....

.....

.....

(Total for Question 18 = 11 marks)

BLANK PAGE

DO NOT WRITE IN THIS AREA
DO NOT WRITE IN THIS AREA
DO NOT WRITE IN THIS AREA

DO NOT WRITE IN THIS AREA
DO NOT WRITE IN THIS AREA
DO NOT WRITE IN THIS AREA

19 A loudspeaker produces a sound wave in air.

(a) Diagram 1 shows air molecules before the sound wave passes.

Diagram 1



At a particular instant as the sound wave passes, the air molecules are displaced as shown in Diagram 2.

Diagram 2



(i) Label a point on Diagram 2 where the pressure of the air is a minimum.

(1)

(ii) Sketch a graph of displacement against distance for the air particles between A and B at this instant on the axes below.



(2)

(b) The speed of sound can be determined using the apparatus shown.

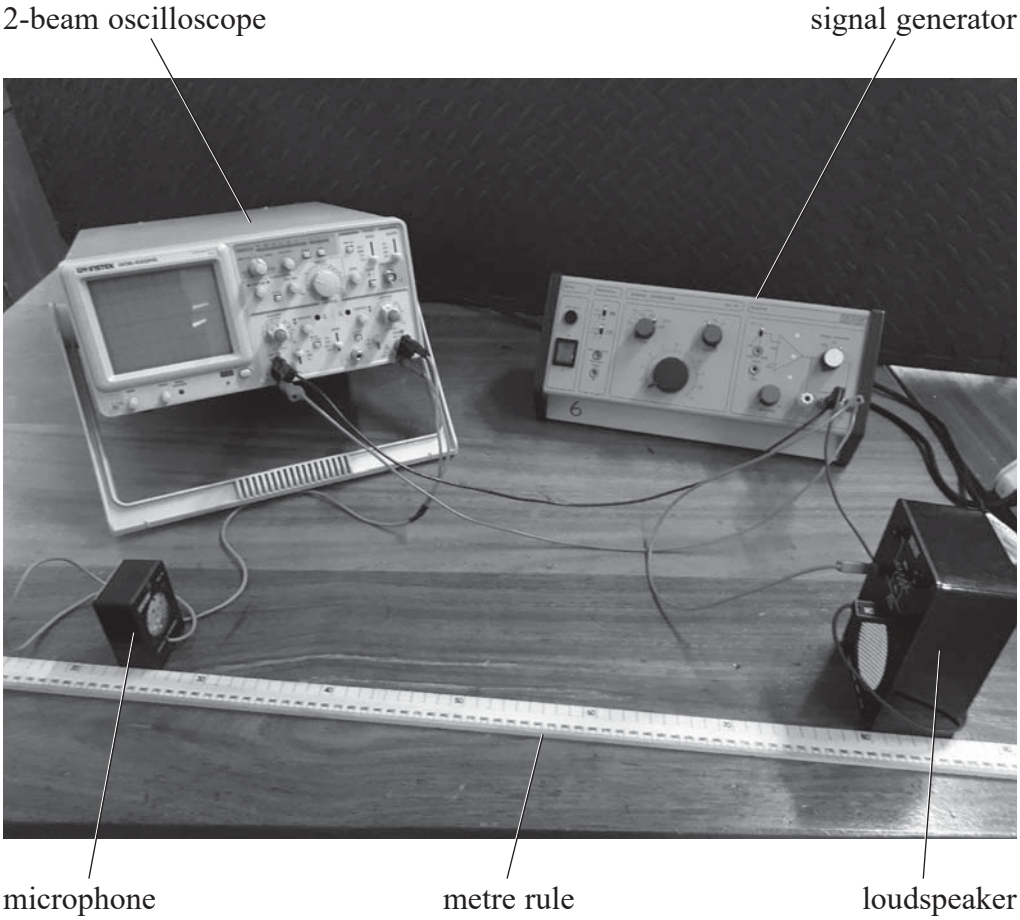

When the loudspeaker is switched on, two traces are produced on the oscilloscope, one directly from the signal generator and the other from the microphone.

(i) Describe how a value for the speed of sound in air can be determined.

(5)

DO NOT WRITE IN THIS AREA
DO NOT WRITE IN THIS AREA
DO NOT WRITE IN THIS AREA

DO NOT WRITE IN THIS AREA
DO NOT WRITE IN THIS AREA
DO NOT WRITE IN THIS AREA

(ii) Describe how the oscilloscope display can be used to demonstrate that the two traces have the same frequency.

(2)

.....

.....

.....

.....

(iii) A frequency of 15.0 kHz was used. A student suggested that the experiment would give a more accurate result for the speed of sound if a frequency of 4.0 kHz was used.

Evaluate the student's suggestion. You should use a calculation in your answer.

speed of sound in air = 340 m s^{-1}

(3)

.....

.....

.....

.....

.....

.....

.....

(Total for Question 19 = 13 marks)

TOTAL FOR SECTION B = 70 MARKS
TOTAL FOR PAPER = 80 MARKS

DO NOT WRITE IN THIS AREA

DO NOT WRITE IN THIS AREA

DO NOT WRITE IN THIS AREA

BLANK PAGE

DO NOT WRITE IN THIS AREA
DO NOT WRITE IN THIS AREA
DO NOT WRITE IN THIS AREA

BLANK PAGE

List of data, formulae and relationships

Acceleration of free fall	$g = 9.81\ \text{m s}^{-2}$	(close to Earth's surface)
Electron charge	$e = -1.60 \times 10^{-19}\ \text{C}$	
Electron mass	$m_e = 9.11 \times 10^{-31}\ \text{kg}$	
Electronvolt	$1\,eV = 1.60 \times 10^{-19}\ \text{J}$	
Gravitational field strength	$g = 9.81\ \text{N kg}^{-1}$	(close to Earth's surface)
Planck constant	$h = 6.63 \times 10^{-34}\ \text{J s}$	
Speed of light in a vacuum	$c = 3.00 \times 10^{8}\ \text{m s}^{-1}$	

Unit 1

Mechanics

Kinematic equations of motion

$$s = \frac{(u + v)t}{2}$$

$$v = u + at$$

$$s = ut + \frac{1}{2}at^2$$

$$v^2 = u^2 + 2as$$

Forces

$$\Sigma F = ma$$

$$g = \frac{F}{m}$$

$$W = mg$$

Momentum

$$p = mv$$

Moment of force

$$\text{moment} = Fx$$

Work and energy

$$\Delta W = F\Delta s$$

$$E_k = \frac{1}{2}mv^2$$

$$\Delta E_{grav} = mg\Delta h$$

Power

$$P = \frac{E}{t}$$

$$P = \frac{W}{t}$$

Efficiency

$$\text{efficiency} = \frac{\text{useful energy output}}{\text{total energy input}}$$

$$\text{efficiency} = \frac{\text{useful power output}}{\text{total power input}}$$

DO NOT WRITE IN THIS AREA
DO NOT WRITE IN THIS AREA
DO NOT WRITE IN THIS AREA

DO NOT WRITE IN THIS AREA
DO NOT WRITE IN THIS AREA
DO NOT WRITE IN THIS AREA

Materials

Density $\rho = \frac{m}{V}$

Stokes' law $F = 6\pi\eta r v$

Hooke's law $\Delta F = k\Delta x$

Elastic strain energy $\Delta E_{el} = \frac{1}{2} F \Delta x$

Young modulus $E = \frac{\sigma}{\varepsilon}$ where

Stress $\sigma = \frac{F}{A}$

Strain $\varepsilon = \frac{\Delta x}{x}$

Unit 2

Waves

Wave speed	$v = f\lambda$
Speed of a transverse wave on a string	$v = \sqrt{\frac{T}{\mu}}$
Intensity of radiation	$I = \frac{P}{A}$
Refractive index	$n_1 \sin\theta_1 = n_2 \sin\theta_2$
	$n = \frac{c}{v}$
Critical angle	$\sin C = \frac{1}{n}$
Diffraction grating	$n\lambda = d\sin\theta$

Electricity

Potential difference	$V = \frac{W}{Q}$
Resistance	$R = \frac{V}{I}$
Electrical power, energy	$P = VI$
	$P = I^2R$
	$P = \frac{V^2}{R}$
	$W = VIt$
Resistivity	$R = \frac{\rho l}{A}$
Current	$I = \frac{\Delta Q}{\Delta t}$
	$I = nqvA$
Resistors in series	$R = R_1 + R_2 + R_3$
Resistors in parallel	$\frac{1}{R} = \frac{1}{R_1} + \frac{1}{R_2} + \frac{1}{R_3}$

Quantum physics

Photon model	$E = hf$
Einstein's photoelectric equation	$hf = \phi + \frac{1}{2}mv^2_{max}$
de Broglie wavelength	$\lambda = \frac{h}{p}$

Every effort has been made to contact copyright holders to obtain their permission for the use of copyright material. Pearson Education Ltd. will, if notified, be happy to rectify any errors or omissions and include any such rectifications in future editions

DO NOT WRITE IN THIS AREA
DO NOT WRITE IN THIS AREA
DO NOT WRITE IN THIS AREA