Please check the examination details below before entering your candidate information

Candidate surname	Other names

Pearson Edexcel
International
Advanced Level

Centre Number | | | | | |

Candidate Number | | | | |

Monday 13 January 2020

Morning (Time: 1 hour 30 minutes) | Paper Reference **WPH11/01**

Physics

Advanced Subsidiary
Unit 1: Mechanics and Materials

You must have:
A ruler

Total Marks

Instructions

- Use **black** ink or **black** ball-point pen.
- **Fill in the boxes** at the top of this page with your name, centre number and candidate number.
- Answer **all** questions.
- Answer the questions in the spaces provided
  – *there may be more space than you need.*
- **Show all your working in calculations and include units where appropriate.**

Information

- The total mark for this paper is 80.
- The marks for **each** question are shown in brackets
  – *use this as a guide as to how much time to spend on each question.*
- In questions marked with an **asterisk** (*), marks will be awarded for your ability to structure your answer logically showing how the points that you make are related or follow on from each other where appropriate.
- The list of data, formulae and relationships is printed at the end of this booklet.

Advice

- Read each question carefully before you start to answer it.
- Try to answer every question.
- Check your answers if you have time at the end.

Turn over ▶

P60480A

©2020 Pearson Education Ltd.

1/1/1/1/1/

P 6 0 4 8 0 A 0 1 2 4

Pearson

SECTION A

Answer ALL questions.

For questions 1–10, in Section A, select one answer from A to D and put a cross in the box ☒. If you change your mind, put a line through the box ☒ and then mark your new answer with a cross ☒.

1 Which of the following quantities has the SI base units $kg\,m^2\,s^{-3}$?

☒ **A** force

☒ **B** momentum

☒ **C** power

☒ **D** work done

(Total for Question 1 = 1 mark)

2 Which of the following statements describes the gravitational field strength acting on a body at a point?

☒ **A** gravitational force per unit length

☒ **B** gravitational force per unit mass

☒ **C** gravitational potential energy per unit length

☒ **D** gravitational potential energy per unit mass

(Total for Question 2 = 1 mark)

DO NOT WRITE IN THIS AREA
DO NOT WRITE IN THIS AREA
DO NOT WRITE IN THIS AREA

DO NOT WRITE IN THIS AREA
DO NOT WRITE IN THIS AREA
DO NOT WRITE IN THIS AREA

3 The diagrams below show the velocity of an object before and after a force is applied.

The magnitude of the velocity did not change.



before after

Which of the following arrows represents the direction of the change in velocity?



A **B** **C** **D**

☒ **A**

☒ **B**

☒ **C**

☒ **D**

(Total for Question 3 = 1 mark)

4 A ball of mass m is projected vertically upwards. An air resistance F acts on the ball at all times.

Which of the following equations would apply to the ball as it is travelling upwards?

☒ **A** $mg - F = 0$

☒ **B** $mg + F = 0$

☒ **C** $mg - F = ma$

☒ **D** $mg + F = ma$

(Total for Question 4 = 1 mark)

5 Two objects P and Q are at the same position at time $t = 0$ s. The graphs show how the velocity v varies with time t for each object.

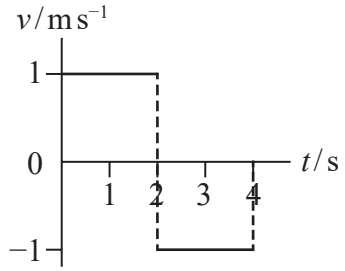

object P

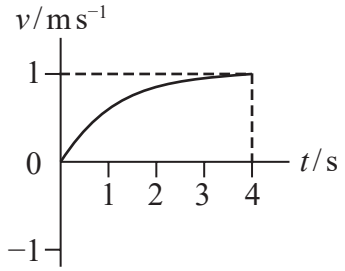

object Q

Which of the following statements describes the positions of P and Q at $t = 4$ s?

☒ **A** P and Q are both at the initial position.

☒ **B** P and Q are the same distance from the initial position.

☒ **C** P is further from the initial position than Q.

☒ **D** Q is further from the initial position than P.

(Total for Question 5 = 1 mark)

DO NOT WRITE IN THIS AREA
DO NOT WRITE IN THIS AREA
DO NOT WRITE IN THIS AREA

DO NOT WRITE IN THIS AREA
DO NOT WRITE IN THIS AREA
DO NOT WRITE IN THIS AREA

6 A ball is travelling horizontally at a speed of $7.0\,m\,s^{-1}$. The ball hits a vertical wall and rebounds along its initial path at a speed of $5.0\,m\,s^{-1}$.
The ball has an acceleration of $300\,m\,s^{-2}$ while in contact with the wall.

Which of the following expressions gives the time of contact t between the ball and the wall?

☒ **A** $t = \dfrac{-5 - 7}{-300}$

☒ **B** $t = \dfrac{5 - 7}{-300}$

☒ **C** $t = \dfrac{-5 - 7}{300}$

☒ **D** $t = \dfrac{5 - 7}{300}$

(Total for Question 6 = 1 mark)

7 Trolleys X and Y of masses m and $3m$ respectively are travelling at the same speed towards each other. The trolleys collide and move off together.

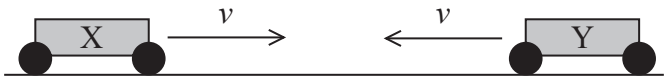

Which of the following statements is correct?

☒ **A** The force of X on Y during the collision is greater than the force of Y on X.

☒ **B** The force of X on Y during the collision is less than the force of Y on X.

☒ **C** The speed of X after the collision is greater than v.

☒ **D** The speed of X after the collision is less than v.

(Total for Question 7 = 1 mark)

8 A motor with an efficiency of 68% is used to raise a load of 350 N through a height of 25 m.

Which of the following expressions gives the energy supplied to the motor?

☒ **A** $\frac{68}{350 \times 25}$

☒ **B** $\frac{0.68}{350 \times 25}$

☒ **C** $\frac{350 \times 25}{68}$

☒ **D** $\frac{350 \times 25}{0.68}$

(Total for Question 8 = 1 mark)

9 A length of steel wire is fixed at one end. An increasing force is applied to the other end of the wire. The force extension graph for the wire is shown.

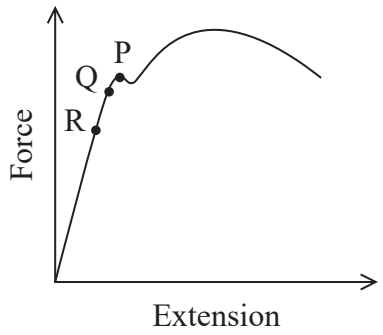

Which row of the table identifies points P, Q and R on the graph?

	P	Q	R
☒ **A**	elastic limit	limit of proportionality	yield point
☒ **B**	elastic limit	yield point	limit of proportionality
☒ **C**	yield point	elastic limit	limit of proportionality
☒ **D**	yield point	limit of proportionality	elastic limit

(Total for Question 9 = 1 mark)

DO NOT WRITE IN THIS AREA
DO NOT WRITE IN THIS AREA
DO NOT WRITE IN THIS AREA

DO NOT WRITE IN THIS AREA
DO NOT WRITE IN THIS AREA
DO NOT WRITE IN THIS AREA

10 Some students were shown a velocity-time graph for the motion of an object falling through a liquid.

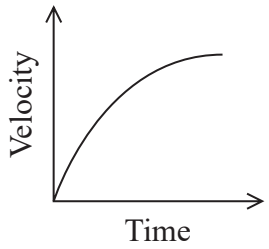

The students suggested possible explanations for the decrease in gradient of the graph.

Which explanation could be a reason for the gradient of the graph decreasing?

☒ **A** The drag force increases.

☒ **B** The gravitational force increases.

☒ **C** The temperature of the liquid increases.

☒ **D** The upthrust on the object decreases.

(Total for Question 10 = 1 mark)

TOTAL FOR SECTION A = 10 MARKS

SECTION B

Answer ALL questions in the spaces provided.

11 A student carried out an experiment to measure the acceleration of free-fall g.

A ball bearing was released from position A. The time t for the ball bearing to fall a distance l was measured. This was repeated for decreasing values of l.

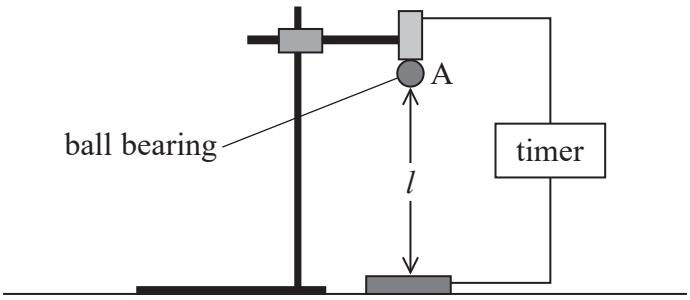

Explain how the measurements obtained can be used to determine a value for g in $m\,s^{-2}$. Your answer should include a sketch on the axes below of the graph that the student would expect to obtain.

(5)

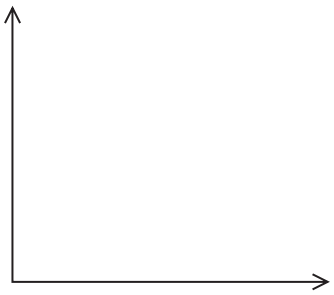

(Total for Question 11 = 5 marks)

DO NOT WRITE IN THIS AREA
DO NOT WRITE IN THIS AREA
DO NOT WRITE IN THIS AREA

DO NOT WRITE IN THIS AREA
DO NOT WRITE IN THIS AREA
DO NOT WRITE IN THIS AREA

12 Stokes' law can be used to determine the magnitude of the viscous drag for small, spherical objects moving through a fluid.

(a) State one other condition that must be met in order for Stokes' law to apply to the moving object.

(1)

.....

(b) A sphere falls through water at a constant speed of $0.50\,m\,s^{-1}$.

Assess whether Stokes' law can be applied to the falling sphere.

You should include calculations in your answer.

diameter of ball bearing = 6.0×10^{-3} m
mass of steel ball bearing = 9.1×10^{-4} kg
upthrust on ball bearing = 1.1×10^{-3} N
viscosity of water = 8.9×10^{-4} Pa s

(5)

.....

.....

.....

.....

.....

.....

.....

.....

.....

.....

(Total for Question 12 = 6 marks)

13 A book of length l and weight W is positioned on a shelf as shown.

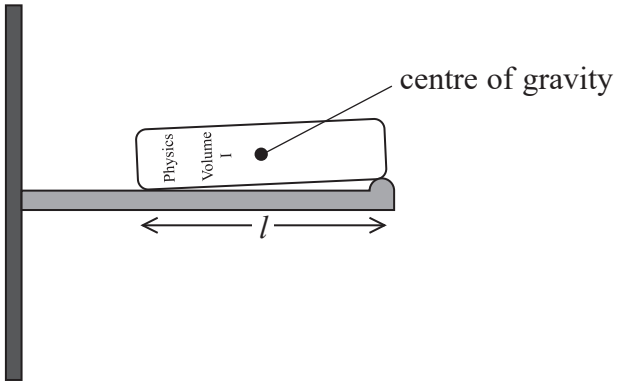

(a) State what is meant by centre of gravity.

(1)

.....

.....

(b) There are contact forces at the two positions where the book touches the shelf.

The book is moved a distance x to the right as shown.

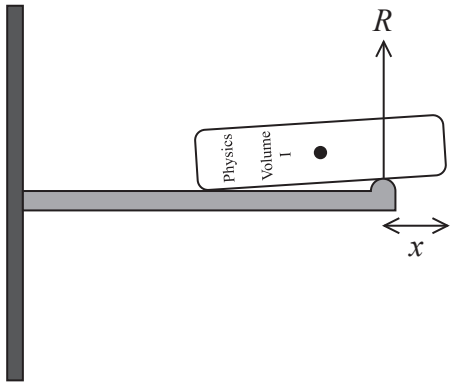

The magnitude of the contact force R varies with x.

Sketch on the axes below the variation of R with x between 0 and $\frac{l}{2}$. You should mark the maximum value of R onto the axes.

(3)

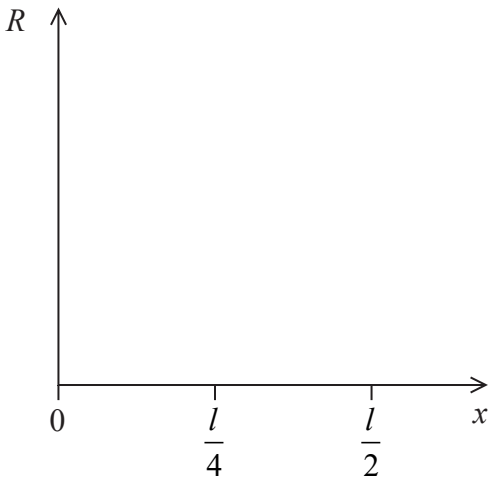

DO NOT WRITE IN THIS AREA
DO NOT WRITE IN THIS AREA
DO NOT WRITE IN THIS AREA

(c) Explain why the book will not remain on the shelf if $x > \frac{l}{2}$.

(2)

.....

.....

.....

.....

.....

.....

.....

(Total for Question 13 = 6 marks)

DO NOT WRITE IN THIS AREA
DO NOT WRITE IN THIS AREA
DO NOT WRITE IN THIS AREA

***14** When concrete is placed under stress, cracks may form. Scientists are investigating ways to prevent cracks from spreading through the concrete. One way to do this is by adding very small capsules containing glue to the concrete mix. As a crack spreads through the concrete, some capsules break, releasing glue which fills the crack, as shown.

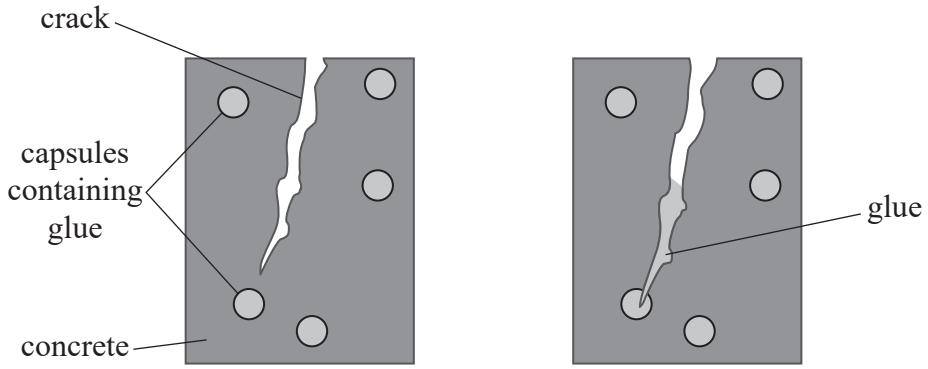

Two samples of concrete, of identical size, were placed under stress. Sample A consisted of concrete only, Sample B consisted of concrete with capsules containing glue.

The stress-strain graphs for the samples up to the maximum stress before fracture are shown.

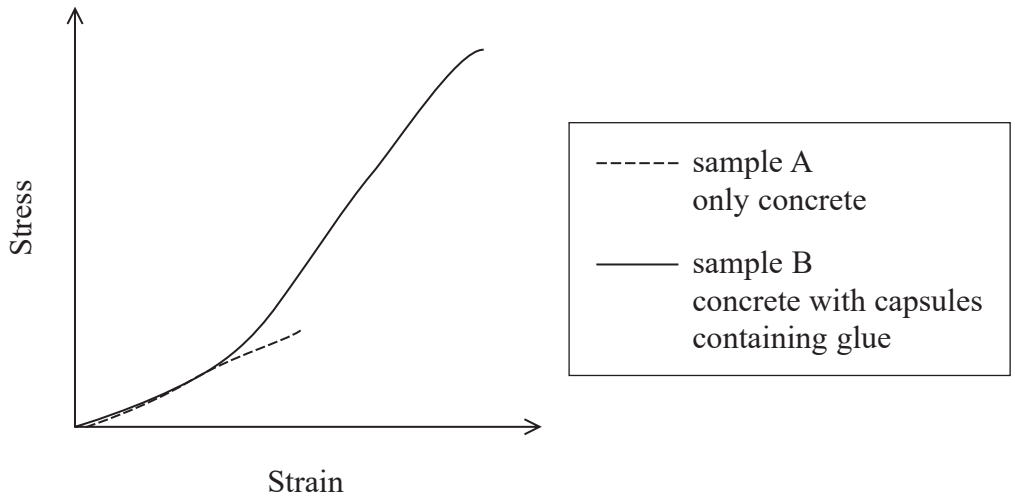

DO NOT WRITE IN THIS AREA
DO NOT WRITE IN THIS AREA
DO NOT WRITE IN THIS AREA

DO NOT WRITE IN THIS AREA
DO NOT WRITE IN THIS AREA
DO NOT WRITE IN THIS AREA

Explain how adding capsules containing glue changes the properties of the concrete.

(6)

(Total for Question 14 = 6 marks)

15 A ball falls through a vertical height of 0.60 m before bouncing at point A on a ramp, as shown.

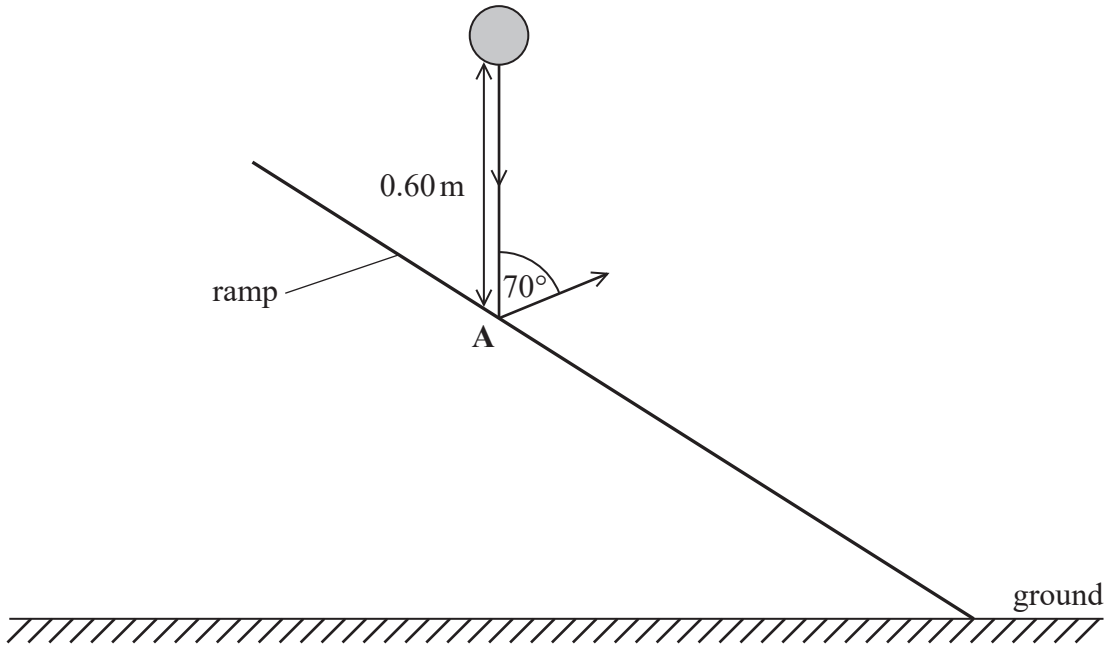

(a) Show that the velocity of the ball immediately before the bounce is about 3 m s^{-1}.

(2)

.....

.....

.....

.....

(b) Kinetic energy is conserved as the ball bounces off the ramp. The ball bounces at an angle of 70° to the vertical.

State expressions for the horizontal and vertical components of velocity of the ball immediately after the bounce.

(2)

Horizontal component = ...

Vertical component = ...

DO NOT WRITE IN THIS AREA
DO NOT WRITE IN THIS AREA
DO NOT WRITE IN THIS AREA

DO NOT WRITE IN THIS AREA
DO NOT WRITE IN THIS AREA
DO NOT WRITE IN THIS AREA

(c) Point A is 0.86 m vertically above the ground and 1.23 m horizontally from the end of the ramp as shown.

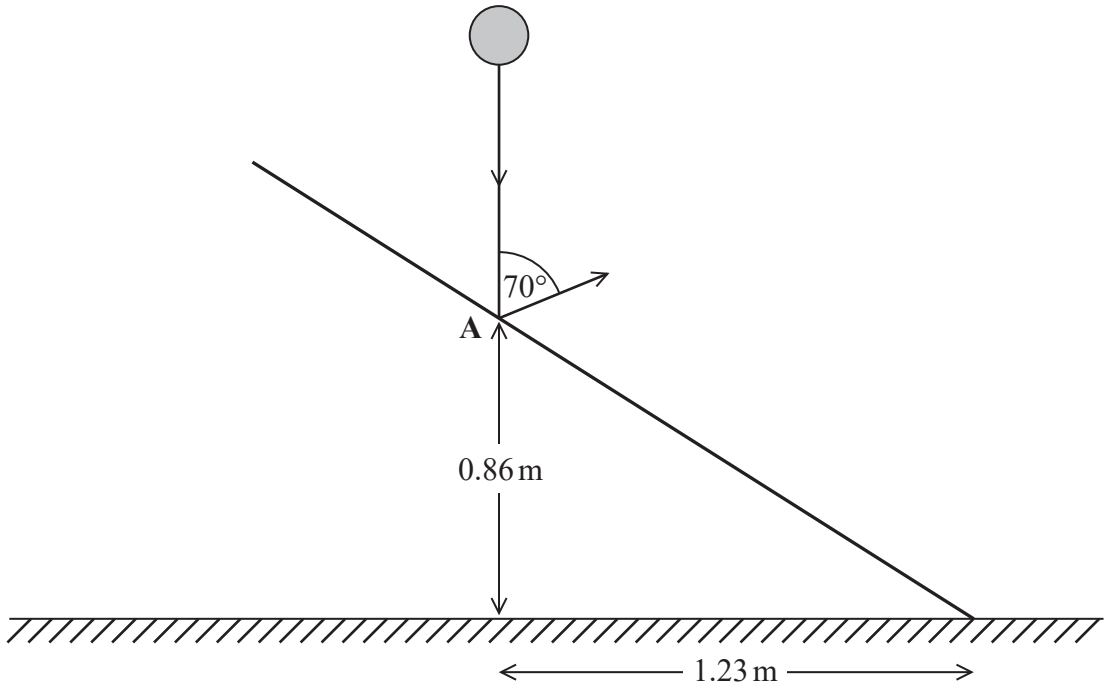

Deduce whether the ball will bounce a second time on the ramp.

(4)

(Total for Question 15 = 8 marks)

16 Popcorn kernels contain water. When heated, the water turns to steam. The kernel 'pops' and moves upwards.

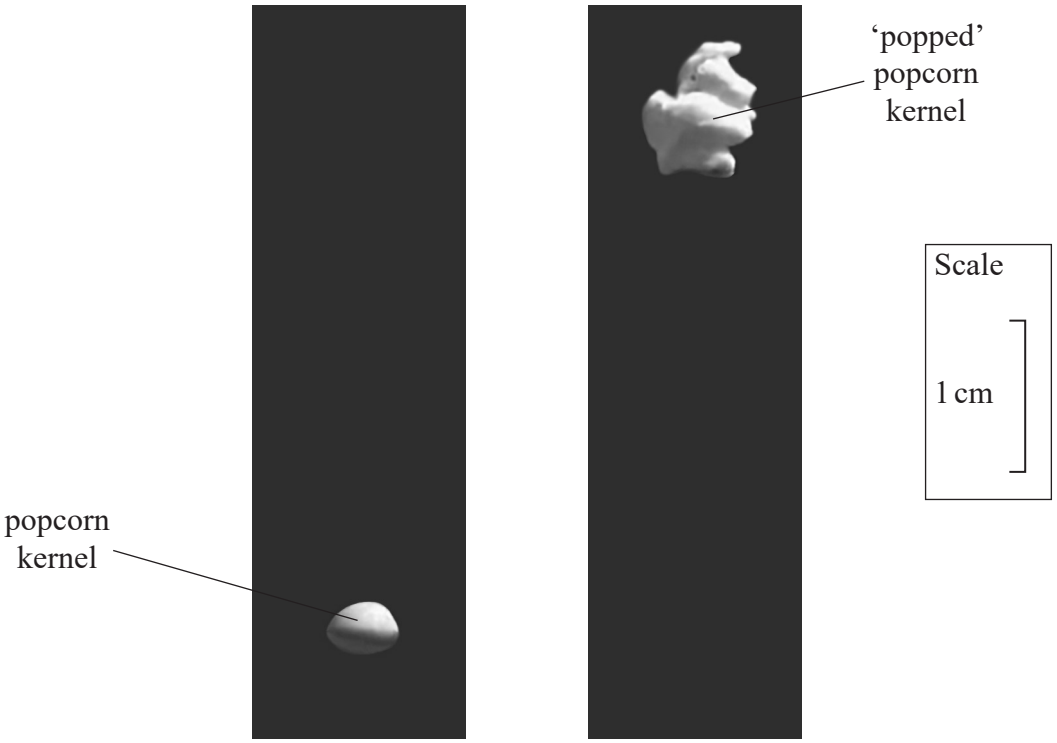

(a) The photographs above show a popcorn kernel just before popping and at the maximum height after popping. The time between the two photographs was 83 ms.

(i) Determine the maximum height after popping.

(2)

.....

.....

Maximum height = ...

DO NOT WRITE IN THIS AREA
DO NOT WRITE IN THIS AREA
DO NOT WRITE IN THIS AREA

DO NOT WRITE IN THIS AREA
DO NOT WRITE IN THIS AREA
DO NOT WRITE IN THIS AREA

(ii) Calculate the initial speed of the 'popped' popcorn kernel.

(3)

Initial speed = ...

(b) The average water content in a popcorn kernel is 14% of the total mass of the kernel.

A kernel is heated until it pops. Steam is ejected downwards, and the popped kernel moves upwards with an initial speed of $1.5\,m\,s^{-1}$.

Calculate the speed at which the steam is ejected.

total mass of unpopped kernel = 0.11 g

(4)

Speed = ...

(Total for Question 16 = 9 marks)

17 An elastic cord was fixed between the end of an air track and a glider.
The glider was pulled to the right, giving the elastic cord an extension Δx as shown.

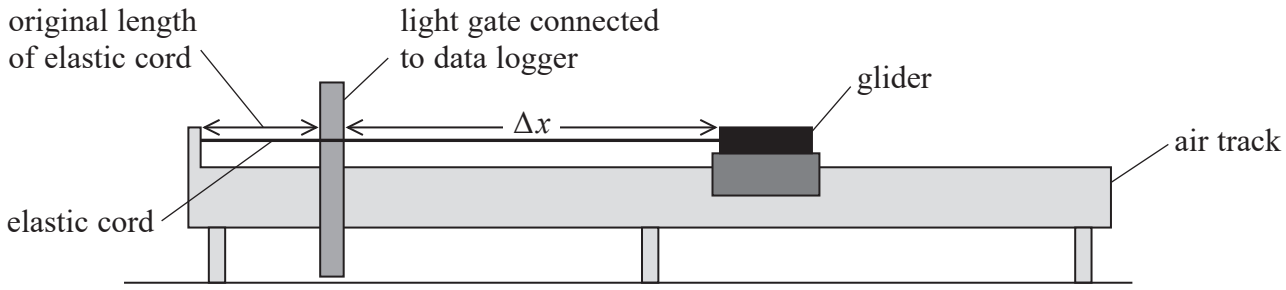

The glider was released, and it moved to the left. A light gate was used to measure the maximum velocity of the glider. This was repeated for different values of Δx.

A student obtained the following results.

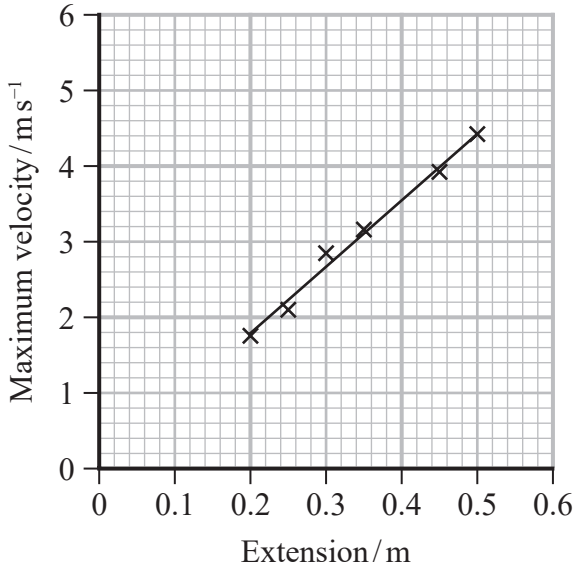

(a) The principle of conservation of energy predicts that the graph should be a straight line through the origin. For the range of values of Δx used, the elastic cord obeyed Hooke's law.

(i) Explain this prediction.

(4)

DO NOT WRITE IN THIS AREA
DO NOT WRITE IN THIS AREA
DO NOT WRITE IN THIS AREA

DO NOT WRITE IN THIS AREA
DO NOT WRITE IN THIS AREA
DO NOT WRITE IN THIS AREA

(ii) Determine the stiffness k of the elastic cord.

mass of glider = 300 g

(3)

k = ...

(b) When the glider was moved to the right by more than 0.5 m, the graph began to curve.

Explain why the shape of the graph changed.

(2)

(Total for Question 17 = 9 marks)

18 A student carried out an experiment to determine the Young modulus of copper.

She added a mass m to the free end of a sample of copper in the form of a long thin wire and the corresponding extension Δx was measured. This was repeated for increasing masses.

(a) State the meaning of the term Young modulus.

(1)

.....

.....

.....

(b) The student repeated the measurement of the diameter of the wire at different positions and orientations of the wire. She obtained the following results.

Diameter / mm	0.230	0.235	0.230	0.240

(i) Determine the cross-sectional area of the sample of wire used.

(3)

.....

.....

.....

.....

.....

Cross-sectional area = ...

DO NOT WRITE IN THIS AREA
DO NOT WRITE IN THIS AREA
DO NOT WRITE IN THIS AREA

DO NOT WRITE IN THIS AREA
DO NOT WRITE IN THIS AREA
DO NOT WRITE IN THIS AREA

(ii) The student plotted a graph of m against Δx. She measured the gradient and obtained a value of $195\,\text{kg}\,\text{m}^{-1}$.

Determine the Young modulus of the copper.

length of sample of copper used = 3.50 m

(3)

Young modulus = ...

(iii) The experiment was repeated by another student, using a 2.00 m length of the copper wire.

Suggest how the values obtained for the gradient and hence the Young modulus will differ between the students.

(2)

(Total for Question 18 = 9 marks)

19 A student used the apparatus shown to investigate the forces acting on a uniform, solid sphere placed in water.

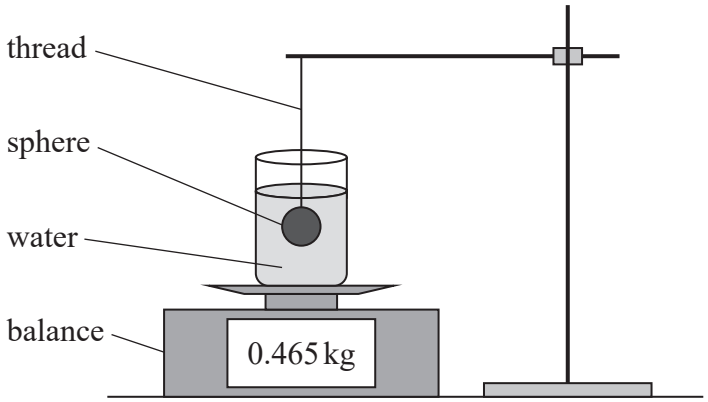

(a) Draw a free-body force diagram for the sphere when it is suspended in water as shown.

(3)

(b) As the sphere was lowered into the water, the reading on the balance increased from 315 g to 465 g as shown.

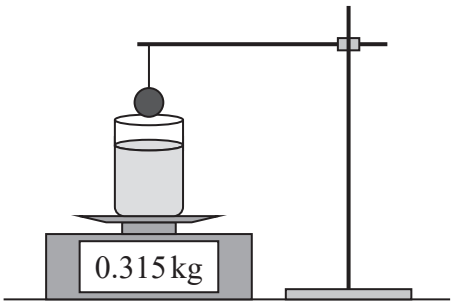

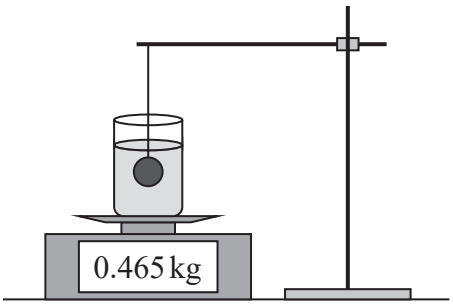

DO NOT WRITE IN THIS AREA
DO NOT WRITE IN THIS AREA
DO NOT WRITE IN THIS AREA

DO NOT WRITE IN THIS AREA
DO NOT WRITE IN THIS AREA
DO NOT WRITE IN THIS AREA

(i) Explain the increase in the reading on the balance. Your answer should include a reference to Newton's third law.

(3)

(ii) Determine the mass of the sphere.

density of water = $1000\,kg\,m^{-3}$
density of sphere = $2000\,kg\,m^{-3}$

(4)

Mass of sphere = ...

(iii) The water was replaced with the same mass of oil and the experiment repeated. The density of the oil is less than the density of water.

Explain what happens to the final reading on the balance.

(2)

(Total for Question 19 = 12 marks)

TOTAL FOR SECTION B = 70 MARKS
TOTAL FOR PAPER = 80 MARKS

List of data, formulae and relationships

Acceleration of free fall	$g = 9.81\ \text{m s}^{-2}$	(close to Earth's surface)
Gravitational field strength	$g = 9.81\ \text{N kg}^{-1}$	(close to Earth's surface)

Unit 1

Mechanics

Kinematic equations of motion

$$s = \frac{(u + v)t}{2}$$

$$v = u + at$$

$$s = ut + \frac{1}{2}at^2$$

$$v^2 = u^2 + 2as$$

Forces

$$\Sigma F = ma$$

$$g = \frac{F}{m}$$

$$W = mg$$

Momentum

$$p = mv$$

Moment of force

$$= Fx$$

Work and energy

$$\Delta W = F\Delta s$$

$$E_k = \frac{1}{2}mv^2$$

$$\Delta E_{grav} = mg\Delta h$$

Power

$$P = \frac{E}{t}$$

$$P = \frac{W}{t}$$

Efficiency

$$\text{efficiency} = \frac{\text{useful energy output}}{\text{total energy input}}$$

$$\text{efficiency} = \frac{\text{useful power output}}{\text{total power input}}$$

Materials

Density

$$\rho = \frac{m}{V}$$

Stokes' law

$$F = 6\pi\eta rv$$

Hooke's law

$$\Delta F = k\Delta x$$

Elastic strain energy

$$\Delta E_{el} = \frac{1}{2}F\Delta x$$

Young modulus

$$E = \frac{\sigma}{\varepsilon} \text{ where}$$

$$\text{Stress } \sigma = \frac{F}{A}$$

$$\text{Strain } \varepsilon = \frac{\Delta x}{x}$$

DO NOT WRITE IN THIS AREA
DO NOT WRITE IN THIS AREA
DO NOT WRITE IN THIS AREA