GradeMax

Please check the examination details below before entering your candidate information

Candidate surname	Other names

Pearson Edexcel
International Advanced Level

Centre Number | Candidate Number

Wednesday 13 January 2021

Morning (Time: 1 hour 30 minutes) | Paper Reference **WPH12/01**

Physics

International Advanced Subsidiary / Advanced Level
Unit 2: Waves and Electricity

You must have:
Scientific calculator, ruler

Total Marks

Instructions

- Use **black** ink or ball-point pen.
- **Fill in the boxes** at the top of this page with your name, centre number and candidate number.
- Answer **all** questions.
- Answer the questions in the spaces provided – *there may be more space than you need.*
- **Show all your working out in calculations and include units where appropriate.**

Information

- The total mark for this paper is 80.
- The marks for **each** question are shown in brackets – *use this as a guide as to how much time to spend on each question.*
- In questions marked with an **asterisk** (*), marks will be awarded for your ability to structure your answer logically showing how the points that you make are related or follow on from each other where appropriate.
- The list of data, formulae and relationships is printed at the end of this booklet.

Advice

- Read each question carefully before you start to answer it.
- Try to answer every question.
- Check your answers if you have time at the end.

Turn over ▶

P65799A

©2021 Pearson Education Ltd.

1/1/1/1/

P 6 5 7 9 9 A 0 1 2 8

Pearson

SECTION A

Answer ALL questions.

For questions 1–10, in Section A, select one answer from A to D and put a cross in the box ☒. If you change your mind, put a line through the box ☒ and then mark your new answer with a cross ☒.

1 The unit of power is the watt.

Which of the following is included in the SI base units for power?

☒ **A** newton

☒ **B** kilogram

☒ **C** joule

☒ **D** ampere

(Total for Question 1 = 1 mark)

2 The diagram shows a combination of three resistors of resistance X, Y and Z.

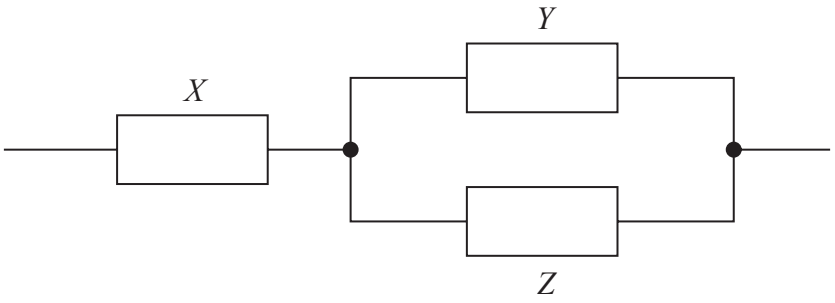

Which of the following gives the total resistance of this combination?

☒ **A** $X + \frac{1}{Y} + \frac{1}{Z}$

☒ **B** $\frac{1}{X} + Y + Z$

☒ **C** $X + \frac{YZ}{Y+Z}$

☒ **D** $\frac{1}{X} + \frac{Y+Z}{YZ}$

(Total for Question 2 = 1 mark)

DO NOT WRITE IN THIS AREA
DO NOT WRITE IN THIS AREA
DO NOT WRITE IN THIS AREA

DO NOT WRITE IN THIS AREA
DO NOT WRITE IN THIS AREA
DO NOT WRITE IN THIS AREA

3 Ultrasound can be used to investigate organs inside the human body.

Which of the following statements about ultrasound is correct?

☒ **A** All of the ultrasound is reflected at a boundary between different tissues.

☒ **B** Ultrasound travels faster in air than inside the body.

☒ **C** Ultrasound with a greater wavelength gives an image with a higher resolution.

☒ **D** Ultrasound with a shorter pulse duration gives an image with a higher resolution.

(Total for Question 3 = 1 mark)

4 Electromagnetic radiation can be described in terms of a photon model.

Which of the following demonstrates the photon model of light?

☒ **A** diffraction patterns

☒ **B** Huygens' construction

☒ **C** photoelectric effect

☒ **D** plane polarisation

(Total for Question 4 = 1 mark)

Questions 5 and 6 refer to the following information.

The diagram shows a circuit used to determine the internal resistance r and e.m.f. ε of a cell.

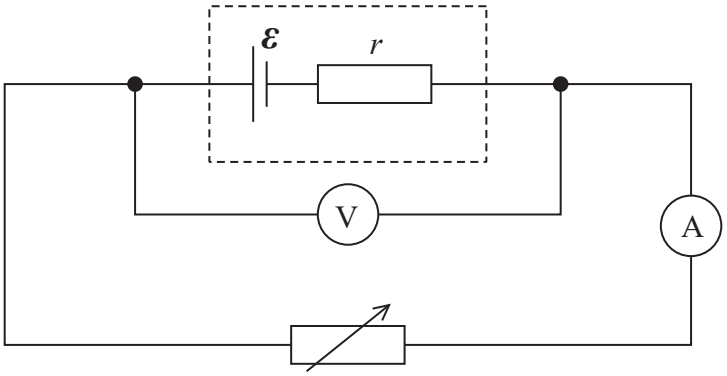

5 Corresponding values of potential difference V and current I were taken after adjusting the variable resistor. A graph of V on the y-axis against I on the x-axis was plotted.

Which of the following is correct?

☒ **A** The area underneath the graph is the total energy dissipated in the cell.

☒ **B** The gradient of the graph is r.

☒ **C** The graph shows that V and I are directly proportional.

☒ **D** The y-intercept of the graph is ε.

(Total for Question 5 = 1 mark)

---

6 The resistance of the variable resistor is R.

Which of the following gives the current in the cell?

☒ **A** $\frac{\varepsilon}{R}$

☒ **B** $\frac{\varepsilon}{r}$

☒ **C** $\frac{\varepsilon}{(R+r)}$

☒ **D** $\frac{\varepsilon}{(R-r)}$

(Total for Question 6 = 1 mark)

DO NOT WRITE IN THIS AREA
DO NOT WRITE IN THIS AREA
DO NOT WRITE IN THIS AREA

DO NOT WRITE IN THIS AREA
DO NOT WRITE IN THIS AREA
DO NOT WRITE IN THIS AREA

7 A graph of displacement against time for a point on a transverse progressive wave is shown.

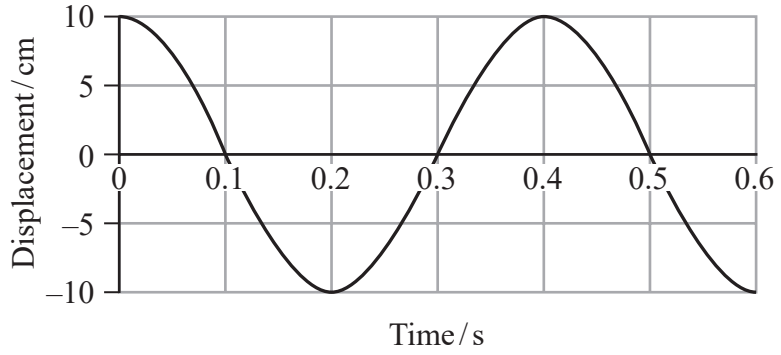

Which of the following statements is correct?

☒ **A** The amplitude of the wave is 20 cm.

☒ **B** The frequency of the wave is 2.5 Hz.

☒ **C** The period of the wave is 0.2 s.

☒ **D** The wavelength of the wave is 0.4 m.

(Total for Question 7 = 1 mark)

8 A ray of light travels through glass, towards a boundary between glass and air.
The critical angle for this boundary is 42°.

Which row of the table is correct?

	Angle of incidence	What happens at the boundary?
☒ **A**	40°	All of the light is refracted
☒ **B**	40°	All of the light is reflected
☒ **C**	45°	All of the light is refracted
☒ **D**	45°	All of the light is reflected

(Total for Question 8 = 1 mark)

9 In 1924 de Broglie suggested that electrons have wave properties.
The de Broglie equation states:

$$\lambda = \frac{h}{p}$$

Which of the following is correct?

☒ **A** The de Broglie wavelength is independent of the mass of the particle.

☒ **B** The de Broglie equation can be used to calculate the momentum of a photon.

☒ **C** The term p represents the mass of an electron multiplied by the speed of light.

☒ **D** The value of h depends on the particle involved.

(Total for Question 9 = 1 mark)

10 In a series circuit, 3.1×10^{19} electrons pass a particular point in a time of 30 seconds.

Which of the following gives the magnitude of the current in amperes in this circuit?

☒ **A** $\dfrac{(3.1 \times 10^{19}) \times (1.6 \times 10^{-19})}{30}$

☒ **B** $\dfrac{3.1 \times 10^{19}}{(1.6 \times 10^{-19}) \times 30}$

☒ **C** $(3.1 \times 10^{19}) \times (1.6 \times 10^{-19}) \times 30$

☒ **D** $\dfrac{(3.1 \times 10^{19}) \times 30}{1.6 \times 10^{-19}}$

(Total for Question 10 = 1 mark)

TOTAL FOR SECTION A = 10 MARKS

DO NOT WRITE IN THIS AREA
DO NOT WRITE IN THIS AREA
DO NOT WRITE IN THIS AREA

DO NOT WRITE IN THIS AREA
DO NOT WRITE IN THIS AREA
DO NOT WRITE IN THIS AREA

SECTION B

Answer ALL questions in the spaces provided.

11 A copper wire of radius 0.40 mm carries a current of 5.1 A.

Calculate the drift velocity of the electrons in the wire.

number of charge carriers per m^3 for copper = 8.5×10^{28}

(2)

Drift velocity = ...

(Total for Question 11 = 2 marks)

12 A student investigated the superposition of water waves in a ripple tank. There are two sources of waves S_1 and S_2, which are in phase.

The diagram shows the positions of successive crests of each wave at an instant in time.

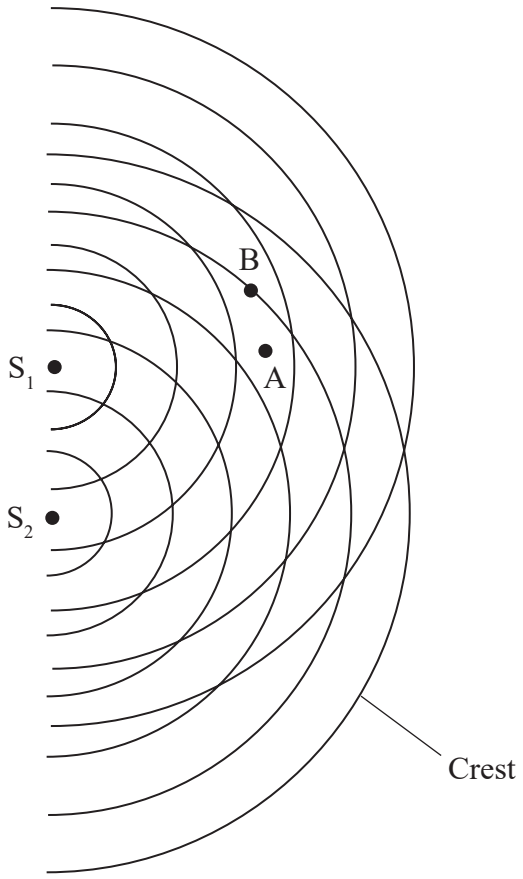

Explain the type of superposition taking place at position A and at position B on the diagram.

(4)

Position A .....

.....

.....

.....

Position B .....

.....

.....

.....

(Total for Question 12 = 4 marks)

DO NOT WRITE IN THIS AREA
DO NOT WRITE IN THIS AREA
DO NOT WRITE IN THIS AREA

DO NOT WRITE IN THIS AREA
DO NOT WRITE IN THIS AREA
DO NOT WRITE IN THIS AREA

13 A student investigated how light intensity affects the resistance of a light dependent resistor (LDR).
She set up a circuit using a cell with negligible internal resistance, as shown.

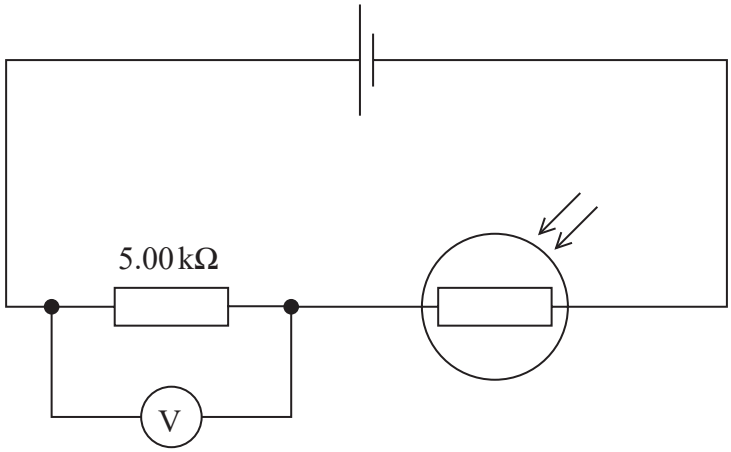

The e.m.f. of the cell was 1.50 V. When the lights in the laboratory were switched off, the voltmeter reading was 1.19 V.

(a) Calculate the resistance of the LDR when the lights were off.

(2)

Resistance of LDR = ...

(b) When the lights were switched back on, the student discovered that it was impossible to calculate the resistance of the LDR using this circuit. The teacher said that with the lights on, the resistance of the LDR was about 9 Ω.

Explain why the student was unable to use the circuit to determine the resistance of the LDR with the lights on. The resolution of the voltmeter was 0.01 V.

(2)

(Total for Question 13 = 4 marks)

14 The diagram shows some of the energy levels for an atom of hydrogen.

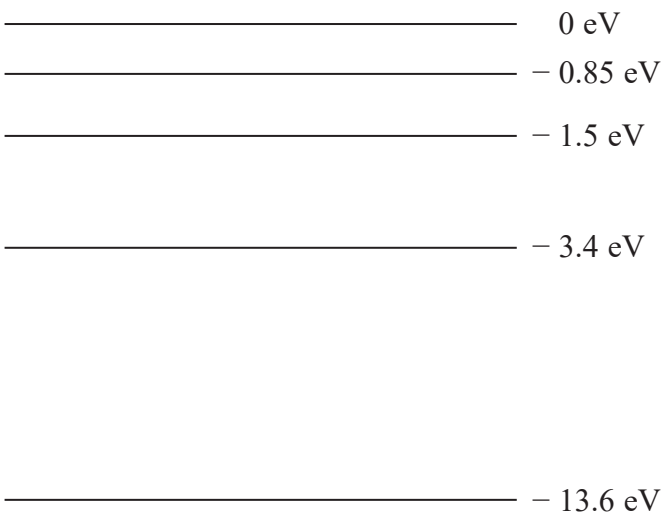

When an electron with a kinetic energy of 12.3 eV interacts with this atom, an electron in the atom moves from the −13.6 eV level to the −1.5 eV level.

When a photon with a photon energy of 12.3 eV is incident on this atom, the electron in the atom at the −13.6 eV level remains at the –13.6 eV level.

Explain these observations.

(4)

(Total for Question 14 = 4 marks)

DO NOT WRITE IN THIS AREA
DO NOT WRITE IN THIS AREA
DO NOT WRITE IN THIS AREA

DO NOT WRITE IN THIS AREA
DO NOT WRITE IN THIS AREA
DO NOT WRITE IN THIS AREA

BLANK PAGE

15 A physics teacher placed a coin at the bottom of a cup.

When viewing the cup from an angle, the coin was not visible, as shown in Photograph 1.



Photograph 1

While still observing from the same angle, the teacher slowly poured water into the cup. The coin gradually became visible, as shown in Photograph 2.



Photograph 2

This effect is caused by refraction.

(a) Explain what is meant by refraction.

(2)

.....

.....

.....

.....

DO NOT WRITE IN THIS AREA
DO NOT WRITE IN THIS AREA
DO NOT WRITE IN THIS AREA

DO NOT WRITE IN THIS AREA
DO NOT WRITE IN THIS AREA
DO NOT WRITE IN THIS AREA

(b) The simplified diagram below shows how a ray of light travels from the edge of the coin to the teacher's eye, when the cup is partially filled with water.

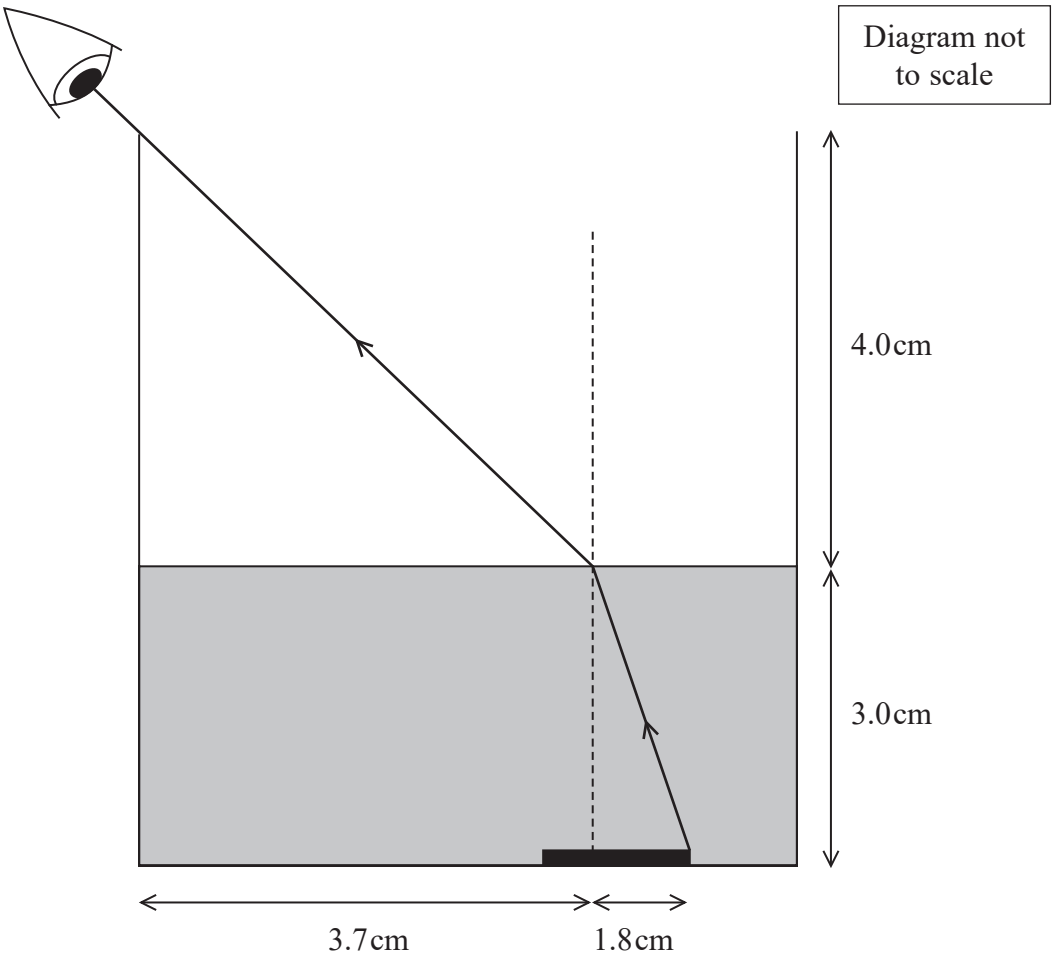

Determine the refractive index of the water in the cup.

(3)

.....

.....

.....

.....

.....

.....

Refractive index of water = ...

(Total for Question 15 = 5 marks)

***16** The graphs show how current I varies with potential difference V for a filament bulb and for a negative temperature coefficient thermistor.

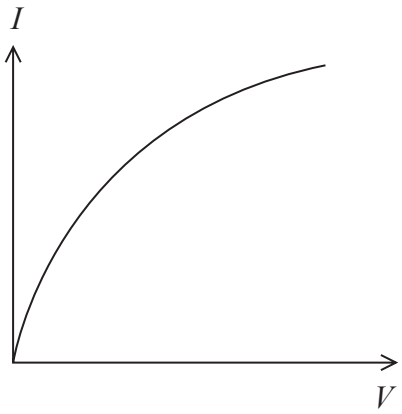

Filament bulb

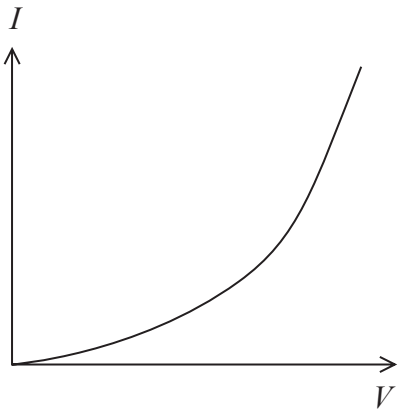

Thermistor

Explain the shape of each graph. Your answer should include reference to the movement of conduction electrons in each component.

(6)

(Total for Question 16 = 6 marks)

DO NOT WRITE IN THIS AREA
DO NOT WRITE IN THIS AREA
DO NOT WRITE IN THIS AREA

DO NOT WRITE IN THIS AREA
DO NOT WRITE IN THIS AREA
DO NOT WRITE IN THIS AREA

17 Ultraviolet light of wavelength 20.0 nm is incident on a metal surface. The metal has a work function of 3.68 eV. Electrons are released by the photoelectric effect.

(a) Calculate the maximum speed of the electrons as they are released from the metal surface.

(5)

Maximum speed = ...

(b) A student suggests that if the wavelength and intensity of the light used are both increased, the maximum speed of the electrons released from the metal surface also increases.

Explain whether the student's suggestion is correct.

(4)

(Total for Question 17 = 9 marks)

18 A teacher has a laser pointer. The laser pointer emits a narrow beam of plane polarised light.

(a) Describe how the teacher can demonstrate that the light from the laser pointer is plane polarised.

(2)

.....

.....

.....

.....

(b) The teacher shines light from the laser pointer onto a diffraction grating as shown. This produces a diffraction pattern on a screen.

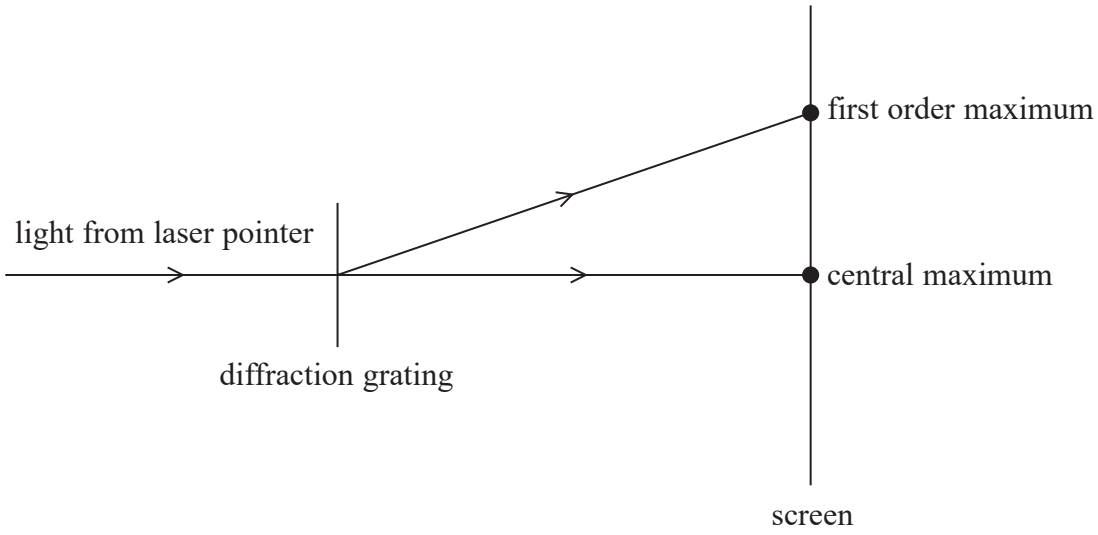

(i) The diffraction grating equation is

$$n\lambda = d\sin\theta$$

State the quantity represented by d.

(1)

.....

DO NOT WRITE IN THIS AREA
DO NOT WRITE IN THIS AREA
DO NOT WRITE IN THIS AREA

DO NOT WRITE IN THIS AREA
DO NOT WRITE IN THIS AREA
DO NOT WRITE IN THIS AREA

(ii) The teacher made the following measurements:

distance from central maximum to first order maximum = 1.61 m
distance from diffraction grating to screen = 2.74 m

The wavelength of the light from the laser pointer was 532 nm.

Calculate the number of lines per millimetre on the diffraction grating.

(3)

Number of lines per millimetre = ...

(iii) Using this diffraction grating and laser pointer, only the first order maxima and the central maximum are produced.

Explain how the teacher, using the same laser pointer, could improve his value for the number of lines per millimetre.

(3)

(Total for Question 18 = 9 marks)

19 A student carried out an experiment to determine the resistivity of nichrome wire. Her circuit included an ammeter, a voltmeter and a variable resistor.

(a) Complete the circuit diagram for this experiment.

(2)

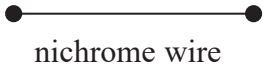

(b) The student varied the length of the nichrome wire in the circuit. For each length, she measured the potential difference across the nichrome wire. She used the variable resistor to keep the current in the wire at 0.200 A during the experiment.

The student plotted a graph of potential difference against length of nichrome wire.

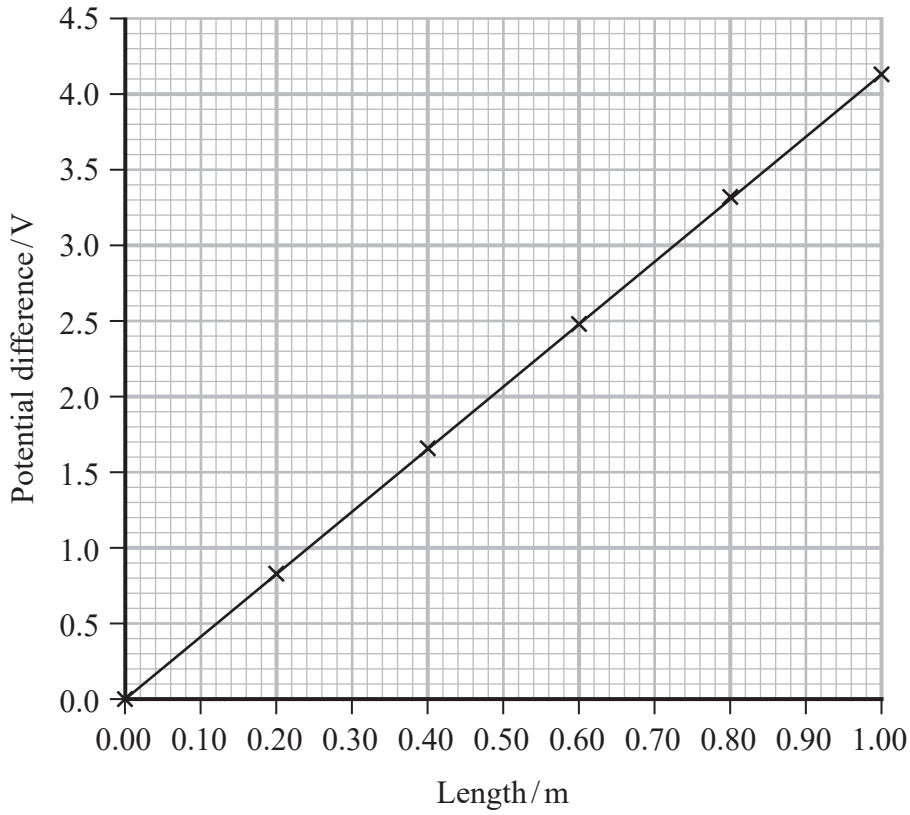

DO NOT WRITE IN THIS AREA
DO NOT WRITE IN THIS AREA
DO NOT WRITE IN THIS AREA

DO NOT WRITE IN THIS AREA
DO NOT WRITE IN THIS AREA
DO NOT WRITE IN THIS AREA

(i) Determine the resistivity of nichrome.

cross sectional area of nichrome wire = $5.31 \times 10^{-8}\,m^2$

(4)

Resistivity of nichrome = ...

(ii) Calculate the power dissipated from the nichrome wire to the surroundings when the length of the wire is 0.75 m.

(3)

Power dissipated = ...

(Total for Question 19 = 9 marks)

20 A 'smart meter' collects information about the use of electricity in the home. This information is transmitted to the electricity company using radio waves.

(a) A typical smart meter emits radio waves with a power output of 1.00 W.
An intensity of radiation greater than 4.5 W m^{-2} is dangerous to people.

A person stands 25 cm from a smart meter.

Deduce whether the radiation emitted by this smart meter would be dangerous to the person at this distance.

(3)

(b) It is suggested that the energy per photon could be important in determining if the radiation emitted by the smart meter is dangerous.

The smart meter transmits radio waves of frequency 902 MHz.

Calculate the energy per photon, in eV, of the photons emitted by the smart meter.

(3)

Energy per photon = ... eV

DO NOT WRITE IN THIS AREA
DO NOT WRITE IN THIS AREA
DO NOT WRITE IN THIS AREA

DO NOT WRITE IN THIS AREA
DO NOT WRITE IN THIS AREA
DO NOT WRITE IN THIS AREA

(c) The display of the smart meter in one household is shown. This shows the total electrical energy used in one day.

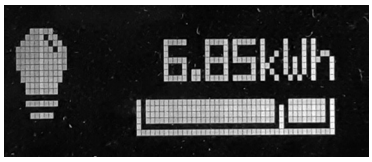

1 kW h is a unit of energy equivalent to 1 kW of power used for 1 hour.

The kettle in this house has a power of 1200 W. The kettle takes 125 seconds to heat the water to boiling. The kettle then switches off.

A student suggests that boiling the kettle once uses less than 1% of the total energy shown on the smart meter display.

Assess the student's suggestion.

(3)

.....

.....

.....

.....

.....

.....

.....

(Total for Question 20 = 9 marks)

21 A recorder is a musical instrument with a mouthpiece at one end, as shown.



(a) When a musician blows into the mouthpiece, a stationary wave is produced in the air column inside the recorder.

(i) The stationary wave has antinodes at both ends of the air column as shown.

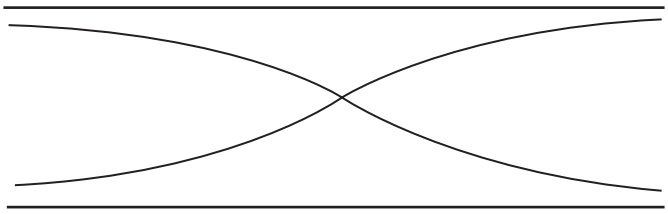

Calculate the frequency of the sound produced by this stationary wave.

speed of sound in air = 330 m s^{-1}
length of recorder = 23.6 cm

(3)

Frequency = ...

DO NOT WRITE IN THIS AREA
DO NOT WRITE IN THIS AREA
DO NOT WRITE IN THIS AREA

(ii) The recorder is made from three separate sections that slide together as shown.



A musician plays the recorder and produces the same frequency sound as in (i). The temperature of the air increases. As the temperature of the air increases, the speed of sound also increases.

Explain how the musician can adjust the recorder to produce the same frequency sound as in (i).

(3)

.....

.....

.....

.....

.....

.....

DO NOT WRITE IN THIS AREA
DO NOT WRITE IN THIS AREA
DO NOT WRITE IN THIS AREA

(b) On a violin, a stationary wave is created when a string is plucked. A violin string has a fixed length but the tension can be adjusted.

When a string is plucked, it produces a sound with a frequency of 432 Hz. This string is adjusted to produce a sound of frequency 440 Hz.

Calculate the percentage increase in the tension in the string.

(3)

.....

.....

.....

.....

.....

.....

Percentage increase = ...

(Total for Question 21 = 9 marks)

TOTAL FOR SECTION B = 70 MARKS
TOTAL FOR PAPER = 80 MARKS

DO NOT WRITE IN THIS AREA
DO NOT WRITE IN THIS AREA
DO NOT WRITE IN THIS AREA

DO NOT WRITE IN THIS AREA
DO NOT WRITE IN THIS AREA
DO NOT WRITE IN THIS AREA

BLANK PAGE

List of data, formulae and relationships

Acceleration of free fall	$g = 9.81\ \text{m s}^{-2}$	(close to Earth's surface)
Electron charge	$e = -1.60 \times 10^{-19}\ \text{C}$	
Electron mass	$m_e = 9.11 \times 10^{-31}\ \text{kg}$	
Electronvolt	$1\ \text{eV} = 1.60 \times 10^{-19}\ \text{J}$	
Gravitational field strength	$g = 9.81\ \text{N kg}^{-1}$	(close to Earth's surface)
Planck constant	$h = 6.63 \times 10^{-34}\ \text{J s}$	
Speed of light in a vacuum	$c = 3.00 \times 10^{8}\ \text{m s}^{-1}$	

Unit 1

Mechanics

Kinematic equations of motion

$$s = \frac{(u + v)t}{2}$$

$$v = u + at$$

$$s = ut + \frac{1}{2}at^2$$

$$v^2 = u^2 + 2as$$

Forces

$$\Sigma F = ma$$

$$g = \frac{F}{m}$$

$$W = mg$$

Momentum

$$p = mv$$

Moment of force

$$\text{moment} = Fx$$

Work and energy

$$\Delta W = F\Delta s$$

$$E_k = \frac{1}{2}mv^2$$

$$\Delta E_{grav} = mg\Delta h$$

Power

$$P = \frac{E}{t}$$

$$P = \frac{W}{t}$$

Efficiency

$$\text{efficiency} = \frac{\text{useful energy output}}{\text{total energy input}}$$

$$\text{efficiency} = \frac{\text{useful power output}}{\text{total power input}}$$

DO NOT WRITE IN THIS AREA
DO NOT WRITE IN THIS AREA
DO NOT WRITE IN THIS AREA

DO NOT WRITE IN THIS AREA
DO NOT WRITE IN THIS AREA
DO NOT WRITE IN THIS AREA

Materials

Density $\rho = \frac{m}{V}$

Stokes' law $F = 6\pi\eta r v$

Hooke's law $\Delta F = k\Delta x$

Elastic strain energy $\Delta E_{el} = \frac{1}{2} F \Delta x$

Young modulus $E = \frac{\sigma}{\varepsilon}$ where

Stress $\sigma = \frac{F}{A}$

Strain $\varepsilon = \frac{\Delta x}{x}$

Unit 2

Waves

Wave speed	$v = f\lambda$
Speed of a transverse wave on a string	$v = \sqrt{\frac{T}{\mu}}$
Intensity of radiation	$I = \frac{P}{A}$
Refractive index	$n_1 \sin\theta_1 = n_2 \sin\theta_2$
	$n = \frac{c}{v}$
Critical angle	$\sin C = \frac{1}{n}$
Diffraction grating	$n\lambda = d\sin\theta$

Electricity

Potential difference	$V = \frac{W}{Q}$
Resistance	$R = \frac{V}{I}$
Electrical power, energy	$P = VI$
	$P = I^2R$
	$P = \frac{V^2}{R}$
	$W = VIt$
Resistivity	$R = \frac{\rho l}{A}$
Current	$I = \frac{\Delta Q}{\Delta t}$
	$I = nqvA$
Resistors in series	$R = R_1 + R_2 + R_3$
Resistors in parallel	$\frac{1}{R} = \frac{1}{R_1} + \frac{1}{R_2} + \frac{1}{R_3}$

Particle nature of light

Photon model	$E = hf$
Einstein's photoelectric equation	$hf = \phi + \frac{1}{2}mv^2_{max}$
de Broglie wavelength	$\lambda = \frac{h}{p}$

Every effort has been made to contact copyright holders to obtain their permission for the use of copyright material. Pearson Education Ltd. will, if notified, be happy to rectify any errors or omissions and include any such rectifications in future editions.

DO NOT WRITE IN THIS AREA
DO NOT WRITE IN THIS AREA
DO NOT WRITE IN THIS AREA