GradeMax

Please check the examination details below before entering your candidate information

| Candidate surname | Other names |
|---|---|
| | |

**Pearson Edexcel**
**International Advanced Level**

Centre Number | | | | | |

Candidate Number | | | | |

# Monday 18 January 2021

Afternoon (Time: 1 hour 20 minutes) | Paper Reference **WPH13/01**

# Physics

## International Advanced Subsidiary / Advanced Level
## Unit 3: Practical Skills in Physics I

**You must have:**
Scientific calculator, ruler, protractor

Total Marks

## Instructions

- Use **black** ink or **black** ball-point pen.
- **Fill in the boxes** at the top of this page with your name, centre number and candidate number.
- Answer **all** questions.
- Answer the questions in the spaces provided – *there may be more space than you need.*
- **Show all your working in calculations and include units where appropriate.**

## Information

- The total mark for this paper is 50.
- The marks for **each** question are shown in brackets – *use this as a guide as to how much time to spend on each question.*
- The list of data, formulae and relationships is printed at the end of this booklet.

## Advice

- Read each question carefully before you start to answer it.
- Try to answer every question.
- Check your answers if you have time at the end.

*Turn over* ▶

P65798A

©2021 Pearson Education Ltd.

1/1/1/1/

P 6 5 7 9 8 A 0 1 2 0

Pearson

**Answer ALL questions.**

**1** A student used the apparatus shown below to investigate the relationship between the acceleration of an object and the resultant force on the object.

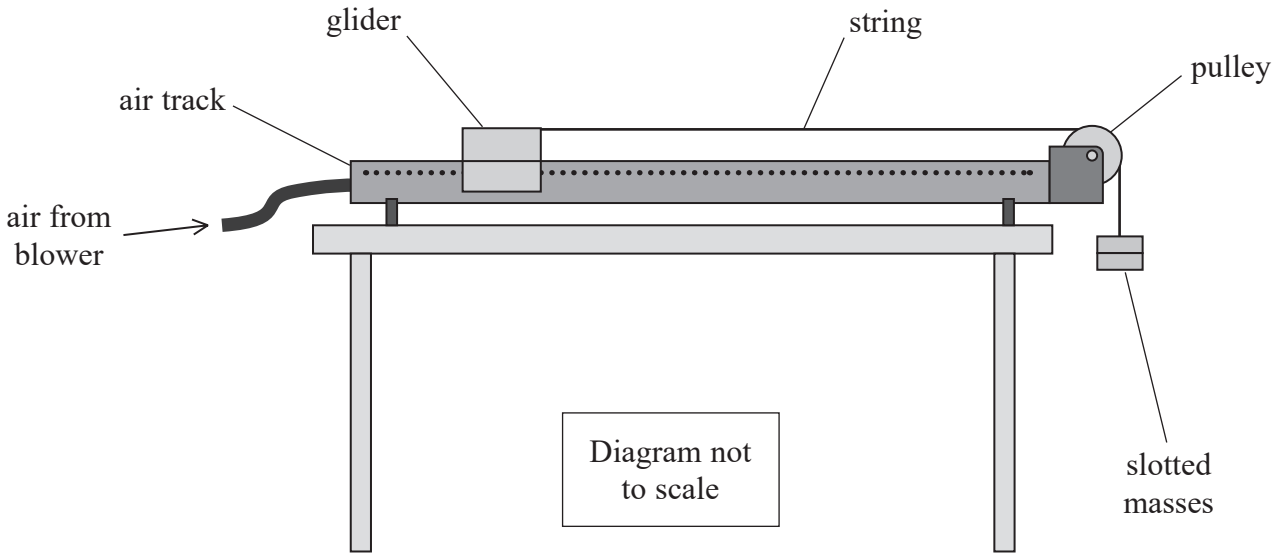


(a) The air track is a long metal tube with holes along its length. Air from a blower enters the tube and escapes through the holes, minimising friction between the glider and the track.

The student released the slotted masses and the glider accelerated along the track.

Describe how he could determine the acceleration of the glider. You may add to the diagram.

**(5)**

DO NOT WRITE IN THIS AREA
DO NOT WRITE IN THIS AREA
DO NOT WRITE IN THIS AREA

DO NOT WRITE IN THIS AREA
DO NOT WRITE IN THIS AREA
DO NOT WRITE IN THIS AREA

(b) Another student completed the investigation.

He recorded his results in a table.

| mass / g | force / N | acceleration / m $s^{-2}$ |
|---|---|---|
| 20 | 0.20 | 0.7 |
| 40 | 0.39 | 1.4 |
| 60 | 0.59 | 1.9 |
| 80 | 0.78 | 2.4 |
| 100 | 0.98 | 2.8 |

He plotted some of the results on a graph.

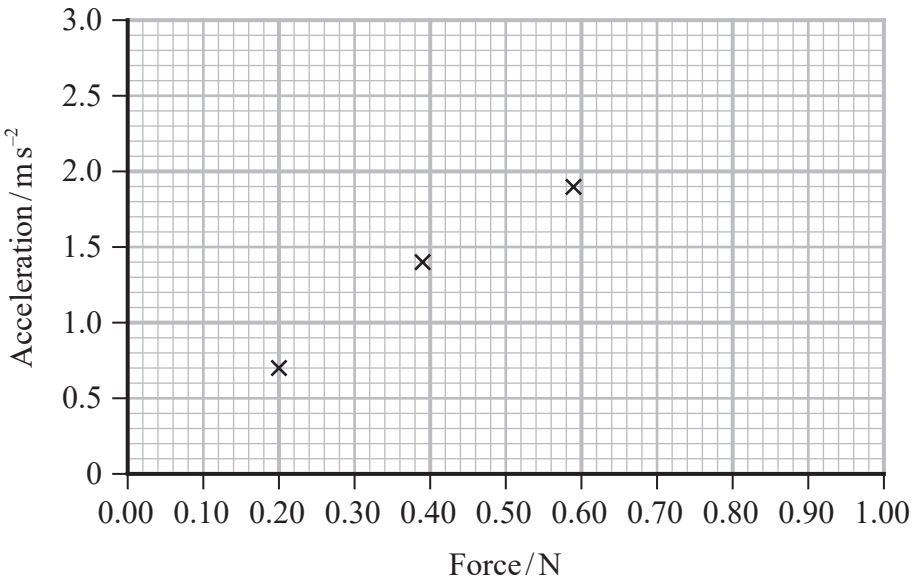


(i) Plot the remaining points and add a line of best fit.

**(2)**

(ii) The student concludes that these results do not show that the acceleration of the glider is directly proportional to the force.

Comment on the student's conclusion.

**(1)**

.....

.....

(c) The teacher explained that for the resultant force to be directly proportional to acceleration, the total mass of the system must be kept constant.

Describe how the student could keep the total mass of the system constant during the investigation.

**(1)**

.....

.....

.....

.....

**(Total for Question 1 = 9 marks)**

DO NOT WRITE IN THIS AREA
DO NOT WRITE IN THIS AREA
DO NOT WRITE IN THIS AREA

DO NOT WRITE IN THIS AREA
DO NOT WRITE IN THIS AREA
DO NOT WRITE IN THIS AREA

**BLANK PAGE**

**2** A student determined the refractive index of a transparent material. The student had a semicircular block of the material as shown.

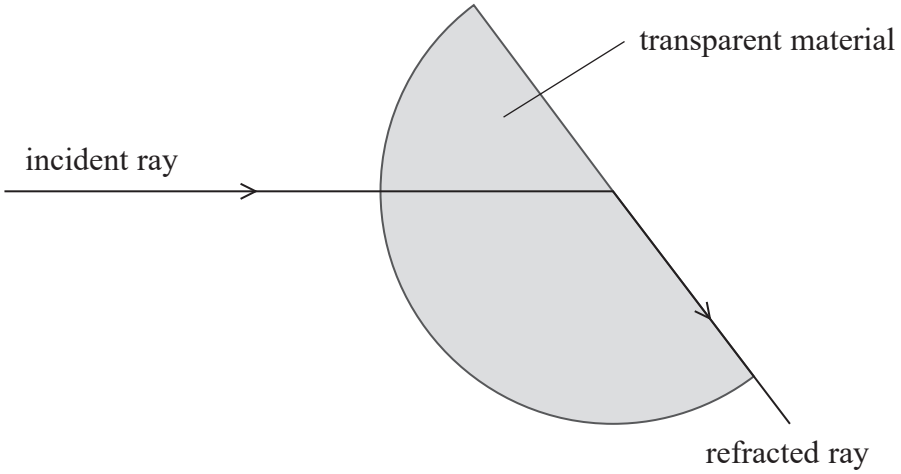


(a) (i) Complete the diagram to show the critical angle.

**(1)**

(ii) Determine the refractive index of the transparent material, using measurements from the diagram.

**(2)**

Refractive index = .....

(b) The student repeated the process for a second semicircular block of a different transparent material.

Her measured value for $C$ was $41 \pm 0.5°$

Calculate the range of possible values of the refractive index.

**(2)**

Range of values of refractive index = .....

DO NOT WRITE IN THIS AREA
DO NOT WRITE IN THIS AREA
DO NOT WRITE IN THIS AREA

DO NOT WRITE IN THIS AREA
DO NOT WRITE IN THIS AREA
DO NOT WRITE IN THIS AREA

(c) The student had a rectangular block of transparent material. She made measurements as shown.

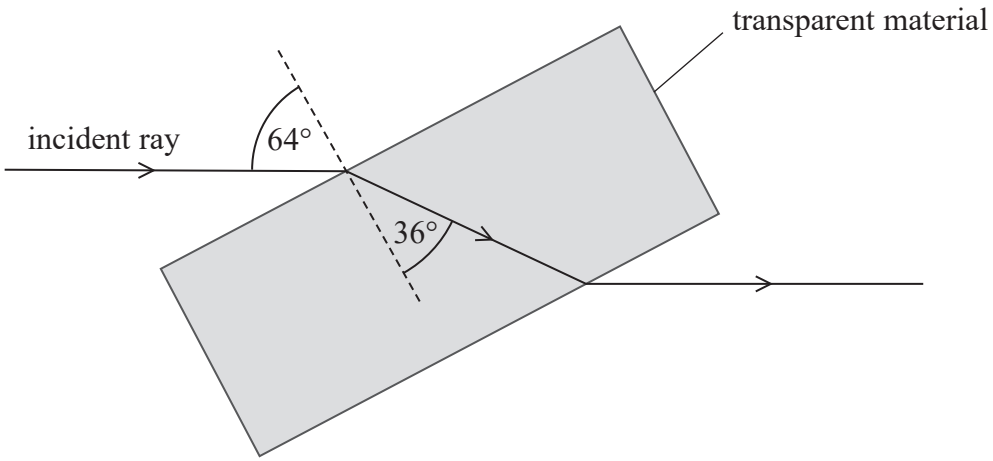


Deduce whether this block is made of the same material as the block in (b).

**(3)**

(d) The student used rays of white light.

Explain why using monochromatic light would increase the validity of the conclusion made in (c).

**(3)**

(e) The photograph shows a spectrometer. This can be used to measure angles when investigating refraction.

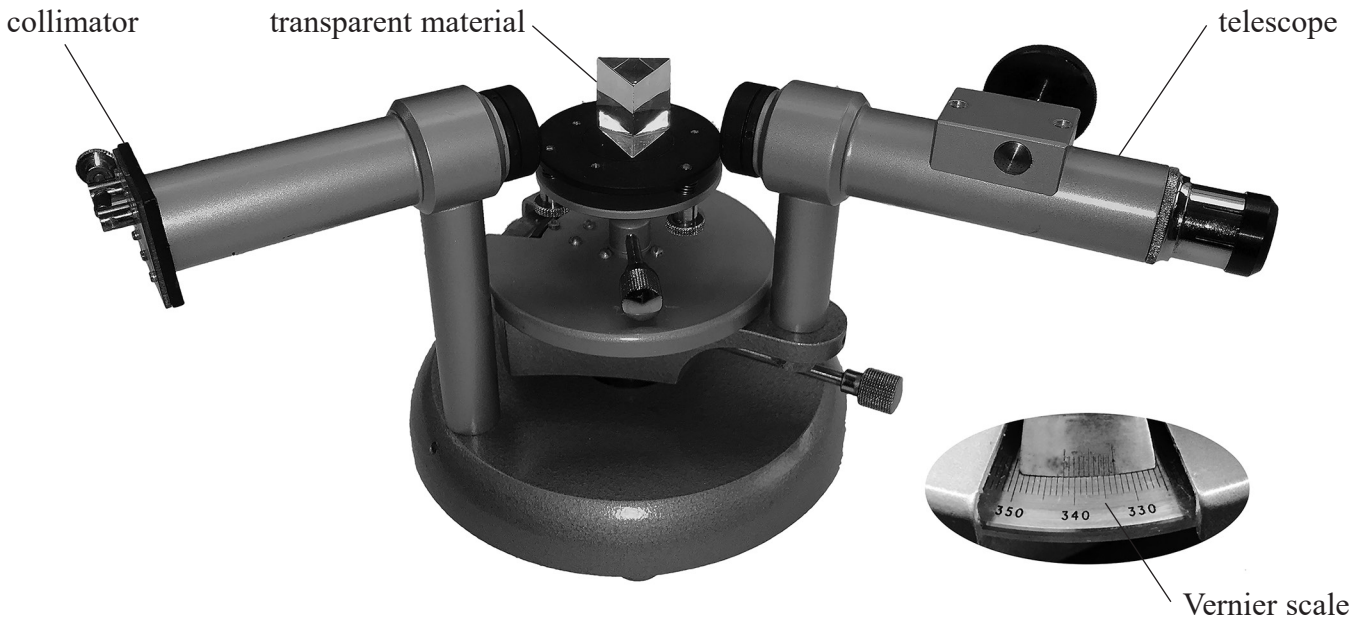


Light emerges from the collimator in a narrow parallel beam.

A Vernier scale allows the angles to be measured with a resolution of 0.1°

Using a spectrometer reduces the uncertainty in the value of the refractive index of the material compared with using a ray box and a protractor.

Justify this statement.

**(3)**

**(Total for Question 2 = 14 marks)**

DO NOT WRITE IN THIS AREA
DO NOT WRITE IN THIS AREA
DO NOT WRITE IN THIS AREA

DO NOT WRITE IN THIS AREA
DO NOT WRITE IN THIS AREA
DO NOT WRITE IN THIS AREA

**3** A student took measurements to plot a force-extension graph for a rubber band.

(a) Describe a method he could have used to take the measurements. Your answer should include a diagram.

**(5)**

(b) The student measured the extension as he was loading and unloading the rubber band.
The graph shows his results.

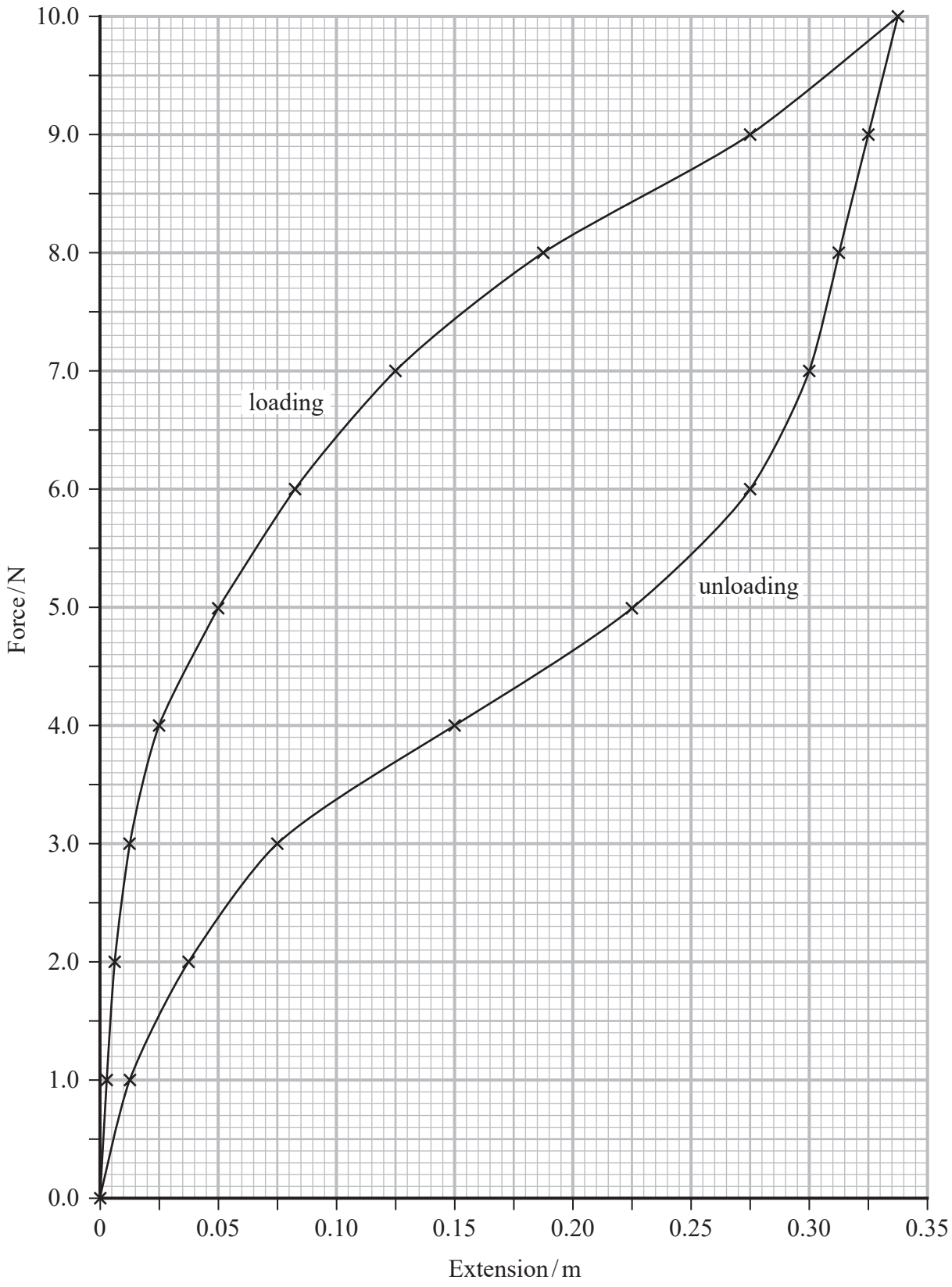


DO NOT WRITE IN THIS AREA
DO NOT WRITE IN THIS AREA
DO NOT WRITE IN THIS AREA

DO NOT WRITE IN THIS AREA
DO NOT WRITE IN THIS AREA
DO NOT WRITE IN THIS AREA

Estimate the energy transferred to the internal energy store of the rubber band during loading and unloading.

**(3)**

.....

.....

.....

.....

.....

.....

Energy transferred = .....

**(Total for Question 3 = 8 marks)**

**4** A student measured potential difference using an analogue voltmeter.

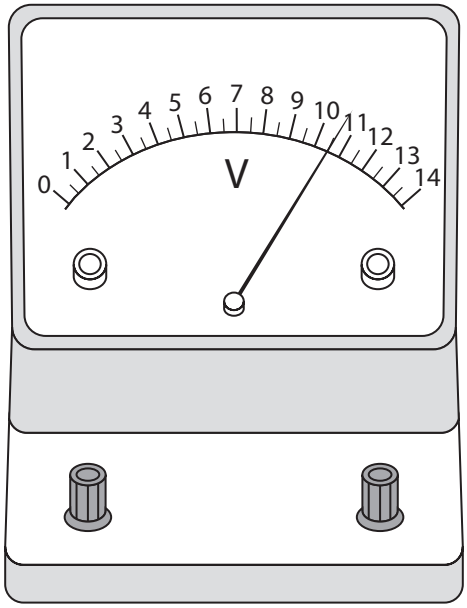


analogue voltmeter

(a) Calculate the percentage uncertainty in the measurement of the potential difference.

**(1)**

.....

.....

.....

Percentage uncertainty = .....

DO NOT WRITE IN THIS AREA
DO NOT WRITE IN THIS AREA
DO NOT WRITE IN THIS AREA

DO NOT WRITE IN THIS AREA
DO NOT WRITE IN THIS AREA
DO NOT WRITE IN THIS AREA

(b) The student could use a digital multimeter.

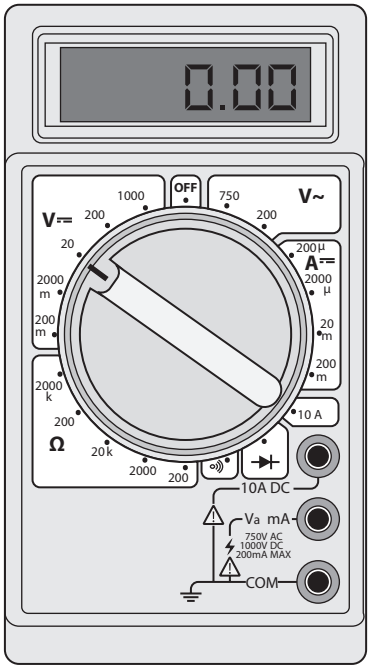


digital multimeter

Discuss the advantages of choosing the digital multimeter to measure the potential difference.

**(3)**

.....

.....

.....

.....

.....

.....

**(Total for Question 4 = 4 marks)**

**5** A student investigated how changing the temperature of a copper wire affects the resistance of the wire.

He placed a coil of the copper wire into a beaker of hot water, as shown.
The temperature of the water was measured using a thermometer with a resolution of 1 °C.
The resistance of the wire was measured using an ohmmeter with a resolution of 0.001 Ω.

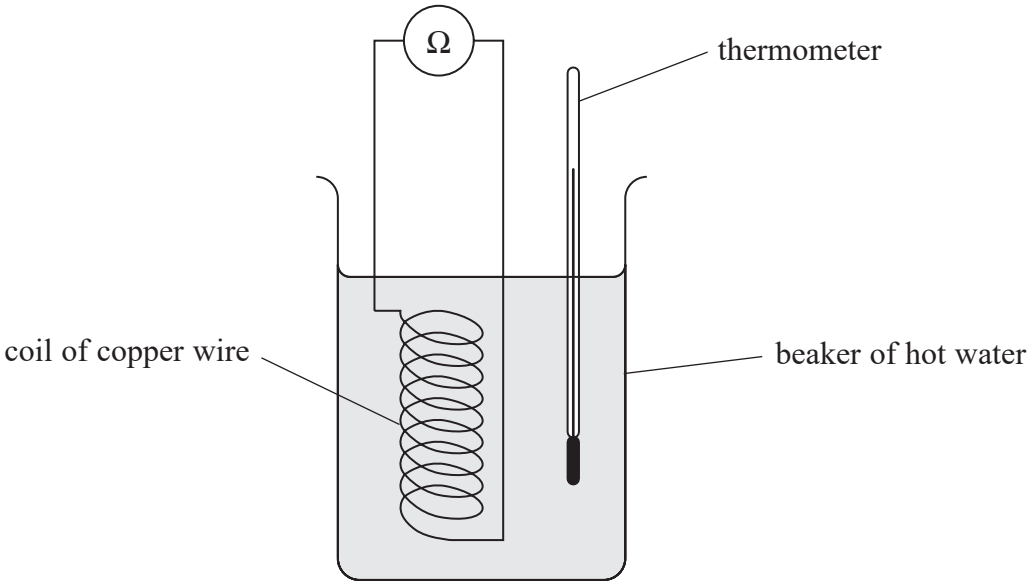


The student recorded corresponding values for the temperature of the water and the resistance of the wire, as the water cooled. The results are shown in the table.

| temperature / °C | resistance / Ω |
|---|---|
| 69 | 0.347 |
| 62 | 0.34 |
| 55 | 0.331 |
| 38 | 0.312 |
| 33 | 0.31 |
| 22 | 0.294 |

(a) Criticise these results.

**(2)**

DO NOT WRITE IN THIS AREA
DO NOT WRITE IN THIS AREA
DO NOT WRITE IN THIS AREA

DO NOT WRITE IN THIS AREA
DO NOT WRITE IN THIS AREA
DO NOT WRITE IN THIS AREA

(b) Plot a graph of resistance on the *y*-axis against temperature on the *x*-axis.

**(5)**

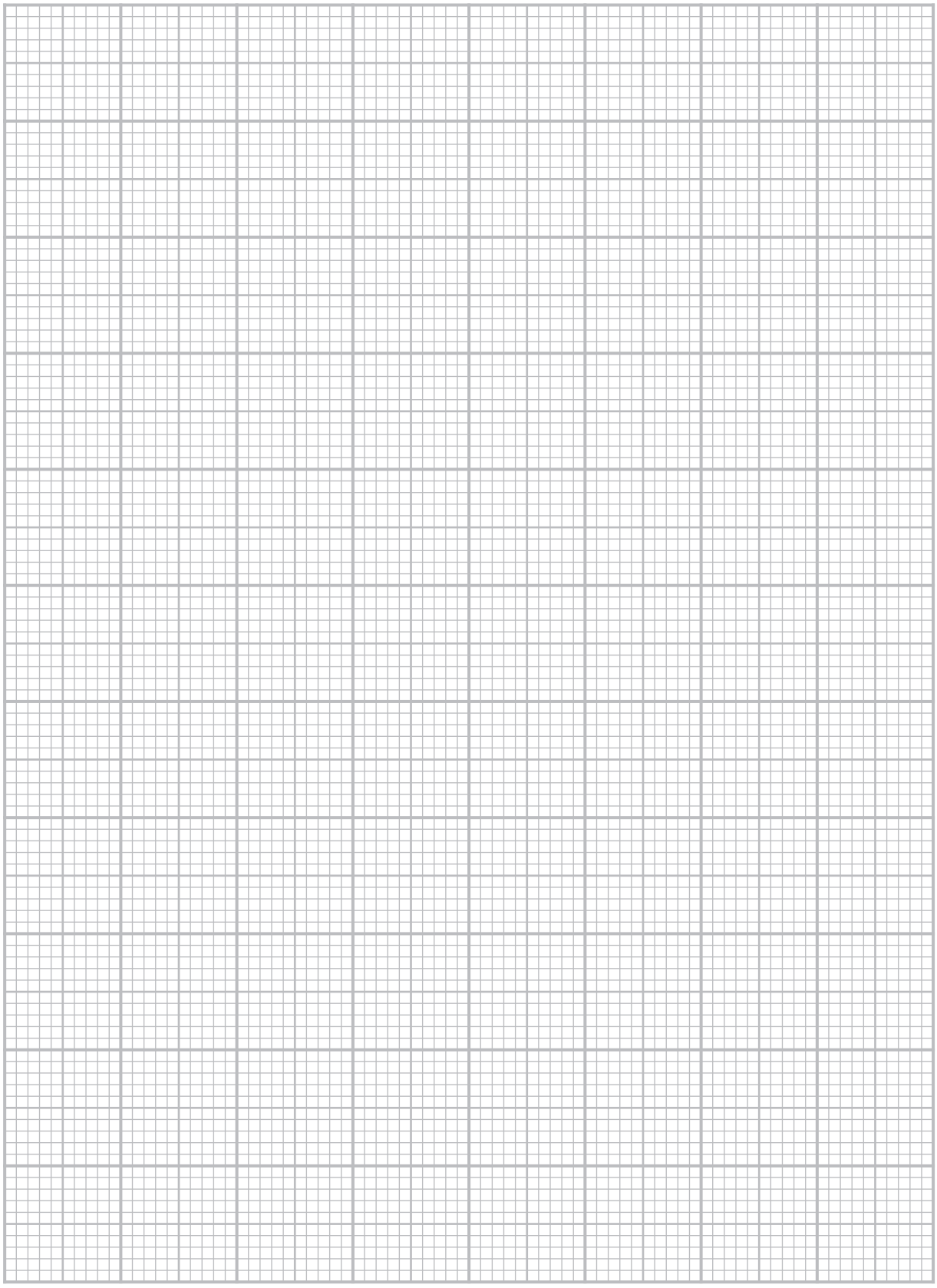

(c) The relationship between the temperature $T$ and the resistance $R$ of the copper wire is given by

$$R = \alpha R_0 T + R_0$$

where $R_0$ is the resistance of the wire at 0 °C
and $\alpha$ is the temperature coefficient of resistance.

Determine $R_0$ and $\alpha$.

**(6)**

$R_0$ = .....

$\alpha$ = .....

(d) Explain one modification to this investigation that would improve the accuracy of the values of $R_0$ and $\alpha$ determined in (c).

**(2)**

**(Total for Question 5 = 15 marks)**

**TOTAL FOR PAPER = 50 MARKS**

DO NOT WRITE IN THIS AREA
DO NOT WRITE IN THIS AREA
DO NOT WRITE IN THIS AREA

DO NOT WRITE IN THIS AREA
DO NOT WRITE IN THIS AREA
DO NOT WRITE IN THIS AREA

**BLANK PAGE**

## List of data, formulae and relationships

| | | |
|---|---|---|
| Acceleration of free fall | $g = 9.81\ \text{m s}^{-2}$ | (close to Earth's surface) |
| Electron charge | $e = -1.60 \times 10^{-19}\ \text{C}$ | |
| Electron mass | $m_e = 9.11 \times 10^{-31}\ \text{kg}$ | |
| Electronvolt | $1\ \text{eV} = 1.60 \times 10^{-19}\ \text{J}$ | |
| Gravitational field strength | $g = 9.81\ \text{N kg}^{-1}$ | (close to Earth's surface) |
| Planck constant | $h = 6.63 \times 10^{-34}\ \text{J s}$ | |
| Speed of light in a vacuum | $c = 3.00 \times 10^{8}\ \text{m s}^{-1}$ | |

***Unit 1***

*Mechanics*

Kinematic equations of motion

$$s = \frac{(u + v)t}{2}$$

$$v = u + at$$

$$s = ut + \frac{1}{2}at^2$$

$$v^2 = u^2 + 2as$$

Forces

$$\Sigma F = ma$$

$$g = \frac{F}{m}$$

$$W = mg$$

Momentum

$$p = mv$$

Moment of force

$$= Fx$$

Work and energy

$$\Delta W = F\Delta s$$

$$E_k = \frac{1}{2}mv^2$$

$$\Delta E_{grav} = mg\Delta h$$

Power

$$P = \frac{E}{t}$$

$$P = \frac{W}{t}$$

Efficiency

$$\text{efficiency} = \frac{\text{useful energy output}}{\text{total energy input}}$$

$$\text{efficiency} = \frac{\text{useful power output}}{\text{total power input}}$$

DO NOT WRITE IN THIS AREA
DO NOT WRITE IN THIS AREA
DO NOT WRITE IN THIS AREA

DO NOT WRITE IN THIS AREA
DO NOT WRITE IN THIS AREA
DO NOT WRITE IN THIS AREA

*Materials*

Density $\rho = \frac{m}{V}$

Stokes' law $F = 6\pi\eta r v$

Hooke's law $\Delta F = k\Delta x$

Elastic strain energy $\Delta E_{el} = \frac{1}{2} F \Delta x$

Young modulus $E = \frac{\sigma}{\varepsilon}$ where

Stress $\sigma = \frac{F}{A}$

Strain $\varepsilon = \frac{\Delta x}{x}$

***Unit 2***

*Waves*

| | |
|---|---|
| Wave speed | $v = f\lambda$ |
| Speed of a transverse wave on a string | $v = \sqrt{\frac{T}{\mu}}$ |
| Intensity of radiation | $I = \frac{P}{A}$ |
| Refractive index | $n_1 \sin\theta_1 = n_2 \sin\theta_2$ |
| | $n = \frac{c}{v}$ |
| Critical angle | $\sin C = \frac{1}{n}$ |
| Diffraction grating | $n\lambda = d\sin\theta$ |

*Electricity*

| | |
|---|---|
| Potential difference | $V = \frac{W}{Q}$ |
| Resistance | $R = \frac{V}{I}$ |
| Electrical power, energy | $P = VI$ |
| | $P = I^2R$ |
| | $P = \frac{V^2}{R}$ |
| | $W = VIt$ |
| Resistivity | $R = \frac{\rho l}{A}$ |
| Current | $I = \frac{\Delta Q}{\Delta t}$ |
| | $I = nqvA$ |
| Resistors in series | $R = R_1 + R_2 + R_3$ |
| Resistors in parallel | $\frac{1}{R} = \frac{1}{R_1} + \frac{1}{R_2} + \frac{1}{R_3}$ |

*Particle nature of light*

| | |
|---|---|
| Photon model | $E = hf$ |
| Einstein's photoelectric equation | $hf = \phi + \frac{1}{2}mv^2_{max}$ |
| de Broglie wavelength | $\lambda = \frac{h}{p}$ |

DO NOT WRITE IN THIS AREA
DO NOT WRITE IN THIS AREA
DO NOT WRITE IN THIS AREA