GradeMax

Please check the examination details below before entering your candidate information

Candidate surname	Other names

Pearson Edexcel
International Advanced Level

Centre Number | Candidate Number

Time 1 hour 30 minutes

Paper reference **WPH12/01**

Physics

International Advanced Subsidiary/Advanced Level
UNIT 2: Waves and Electricity

You must have:
Scientific calculator, ruler

Total Marks

Instructions

- Use **black** ink or ball-point pen.
- **Fill in the boxes** at the top of this page with your name, centre number and candidate number.
- Answer **all** questions.
- Answer the questions in the spaces provided – *there may be more space than you need.*
- **Show all your working out in calculations and include units where appropriate.**

Information

- The total mark for this paper is 80.
- The marks for **each** question are shown in brackets – *use this as a guide as to how much time to spend on each question.*
- In questions marked with an **asterisk (*)**, marks will be awarded for your ability to structure your answer logically showing how the points that you make are related or follow on from each other where appropriate.
- The list of data, formulae and relationships is printed at the end of this booklet.

Advice

- Read each question carefully before you start to answer it.
- Try to answer every question.
- Check your answers if you have time at the end.
- Good luck with your examination.

Turn over ▶

P66614A

©2021 Pearson Education Ltd.

1/1/1/

P 6 6 6 1 4 A 0 1 2 8

Pearson

SECTION A

Answer ALL questions.

For questions 1–10, in Section A, select one answer from A to D and put a cross in the box ☒. If you change your mind, put a line through the box ☒ and then mark your new answer with a cross ☒.

1 Which of the following derived units can be expressed in SI base units as $\text{kg m}^2\text{ s}^{-3}$?

☒ **A** coulomb

☒ **B** joule

☒ **C** volt

☒ **D** watt

(Total for Question 1 = 1 mark)

2 A wave has amplitude A, period T, and wavelength λ.

Which of the following can be used to calculate the speed of the wave?

☒ **A** AT

☒ **B** $\frac{A}{T}$

☒ **C** λT

☒ **D** $\frac{\lambda}{T}$

(Total for Question 2 = 1 mark)

3 A light bulb with an efficiency of 12% is positioned 2.0 m above a light sensor. The intensity of light at the light sensor is 0.14 W m^{-2}.

Which of the following could be used to calculate the power of the light bulb?

☒ **A** $(0.14) \times (0.12) \times (4\pi) \times (2.0)^2$

☒ **B** $\frac{(0.14) \times (4\pi) \times (2.0)^2}{0.12}$

☒ **C** $(0.14) \times (0.12) \times (\pi) \times (2.0)^2$

☒ **D** $\frac{(0.14) \times (\pi) \times (2.0)^2}{0.12}$

(Total for Question 3 = 1 mark)

DO NOT WRITE IN THIS AREA
DO NOT WRITE IN THIS AREA
DO NOT WRITE IN THIS AREA

DO NOT WRITE IN THIS AREA
DO NOT WRITE IN THIS AREA
DO NOT WRITE IN THIS AREA

4 A student investigates how different variables affect the speed of waves on a vibrating string.

Which of the following would increase the speed of waves along the string?

☒ **A** increasing the frequency

☒ **B** increasing the length of the string

☒ **C** increasing the mass per unit length of the string

☒ **D** increasing the tension in the string

(Total for Question 4 = 1 mark)

5 A moving electron has a de Broglie wavelength of 656 nm.

Which of the following could be used to determine the speed of the electron?

☒ **A** $\dfrac{6.63\times10^{-34}}{(656\times10^{-9})\,(9.11\times10^{-31})}$

☒ **B** $\dfrac{(656\times10^{-9})\,(9.11\times10^{-31})}{6.63\times10^{-34}}$

☒ **C** $\dfrac{(656\times10^{-9})\,(6.63\times10^{-34})}{9.11\times10^{-31}}$

☒ **D** $\dfrac{9.11\times10^{-31}}{(656\times10^{-9})\,(6.63\times10^{-34})}$

(Total for Question 5 = 1 mark)

6 A graph of current against potential difference for an electrical component is shown.

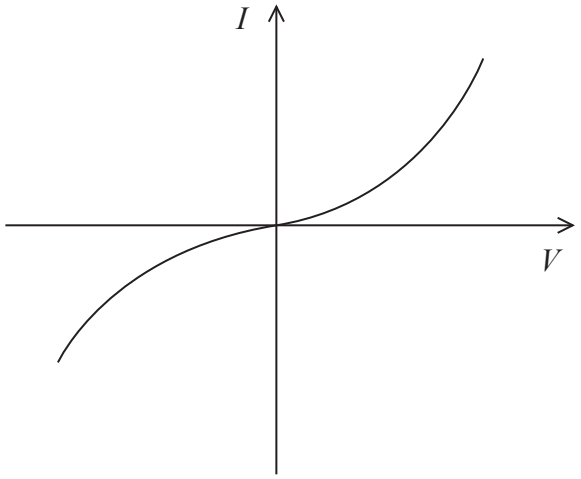

Which component would give this graph?

- ☒ **A** diode
- ☒ **B** filament bulb
- ☒ **C** ohmic conductor
- ☒ **D** thermistor

(Total for Question 6 = 1 mark)

7 Which of the following statements is correct for minimum displacement of the particles in a longitudinal wave?

- ☒ **A** Minimum displacement occurs at compressions only.
- ☒ **B** Minimum displacement occurs at rarefactions only.
- ☒ **C** Minimum displacement occurs at compressions and rarefactions.
- ☒ **D** Minimum displacement occurs at neither compressions nor rarefactions.

(Total for Question 7 = 1 mark)

DO NOT WRITE IN THIS AREA
DO NOT WRITE IN THIS AREA
DO NOT WRITE IN THIS AREA

DO NOT WRITE IN THIS AREA
DO NOT WRITE IN THIS AREA
DO NOT WRITE IN THIS AREA

8 The diagram shows some of the energy levels of a hydrogen atom.

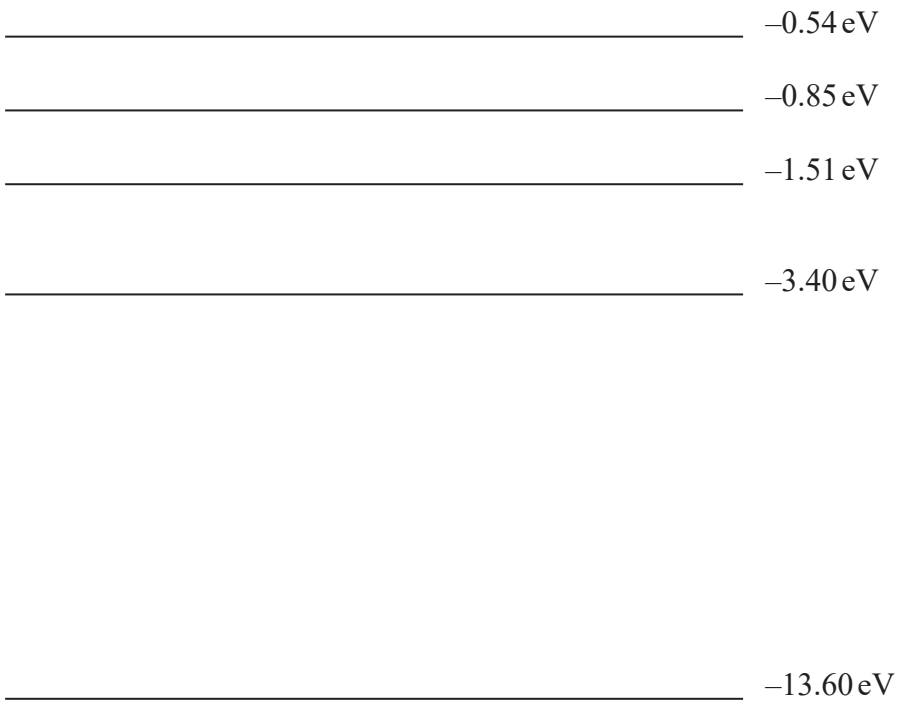

An excited electron in the level –0.54 eV drops to the level –13.60 eV, resulting in the release of at least one photon.

Which of the following photon energy values could **not** be produced from this electron transition?

☒ **A** 0.31 eV

☒ **B** 0.54 eV

☒ **C** 12.09 eV

☒ **D** 13.06 eV

(Total for Question 8 = 1 mark)

9 A pulse of ultrasound is emitted from the bottom of a boat. The ultrasound reflects from the seabed and is detected at the bottom of the boat after time t. The depth d of water under the boat is shown.

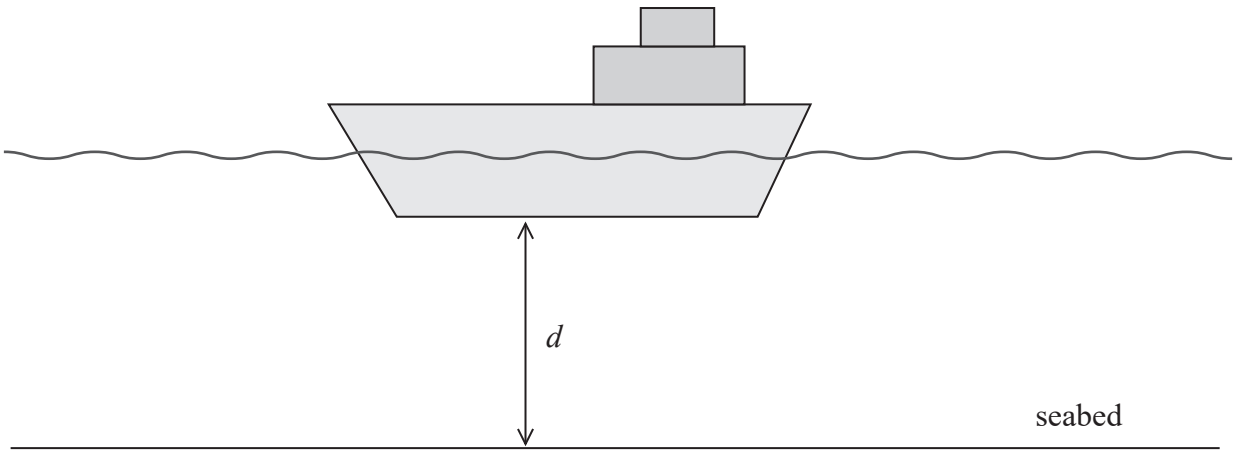

The ultrasound has a frequency f and travels at a speed v in the seawater.

Which of the following can be used to calculate d?

☒ **A** $d = vt$

☒ **B** $d = \frac{v}{f}$

☒ **C** $d = \frac{vt}{2}$

☒ **D** $d = \frac{v}{2f}$

(Total for Question 9 = 1 mark)

10 Two waves leave the same source in phase. The waves travel along different paths and then meet. The wavelength of the waves is 8.0 cm.

Which of the following would cause constructive interference when the waves meet?

☒ **A** path difference of 16.0 cm

☒ **B** path difference of $\frac{3\lambda}{2}$

☒ **C** phase difference of 180°

☒ **D** phase difference of 3π radians

(Total for Question 10 = 1 mark)

TOTAL FOR SECTION A = 10 MARKS

DO NOT WRITE IN THIS AREA
DO NOT WRITE IN THIS AREA
DO NOT WRITE IN THIS AREA

DO NOT WRITE IN THIS AREA
DO NOT WRITE IN THIS AREA
DO NOT WRITE IN THIS AREA

SECTION B

Answer ALL questions in the spaces provided.

11 Two copper wires, W and Z, are joined as shown. Wire W has twice the diameter of wire Z.

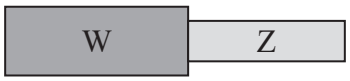

W and Z are connected in series with a cell and resistor, as shown.

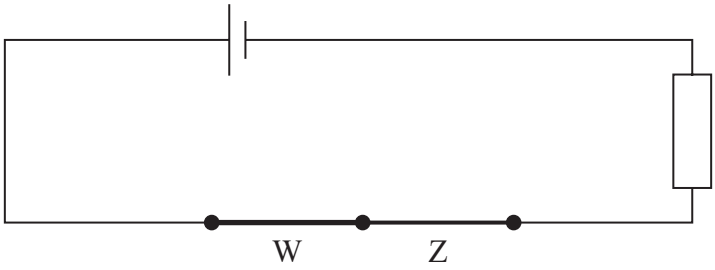

(a) State the purpose of the resistor in this circuit.

(1)

.....

.....

(b) The current I in a conductor is given by the formula

$$I = nqvA$$

Complete the following table, which shows ratios of quantities for wires W and Z.
The first row has been completed for you.

(4)

Ratio	Value	Reason
$\frac{n_w}{n_z}$	1	Both wires are made of the same material
$\frac{I_w}{I_z}$		
$\frac{v_w}{v_z}$		

(Total for Question 11 = 5 marks)

12 The circuit diagram shows a resistor of resistance 270 Ω connected to a battery of e.m.f. 9.0 V. The battery has an internal resistance of 15 Ω.

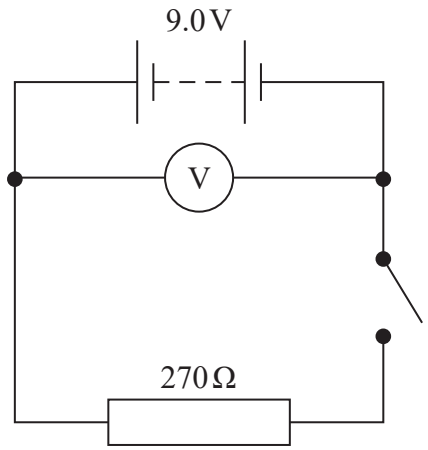

(a) Explain why the reading on the voltmeter is less than 9.0 V when the switch is closed.

(3)

.....

.....

.....

.....

.....

.....

(b) Calculate the reading on the voltmeter when the switch is closed.

(3)

.....

.....

.....

.....

.....

Reading on voltmeter = ...

DO NOT WRITE IN THIS AREA
DO NOT WRITE IN THIS AREA
DO NOT WRITE IN THIS AREA

DO NOT WRITE IN THIS AREA
DO NOT WRITE IN THIS AREA
DO NOT WRITE IN THIS AREA

(c) The switch remains closed and 12 C of charge flows through the battery.

Calculate the decrease in the chemical energy store of the battery.

(2)

.....

.....

.....

Decrease in chemical energy store = ...

(Total for Question 12 = 8 marks)

13 The refractive index of glass varies with the colour of light.

refractive index of glass for red light = 1.513
refractive index of glass for violet light = 1.532

(a) A ray of white light is incident on side AB of a rectangular glass block, as shown.

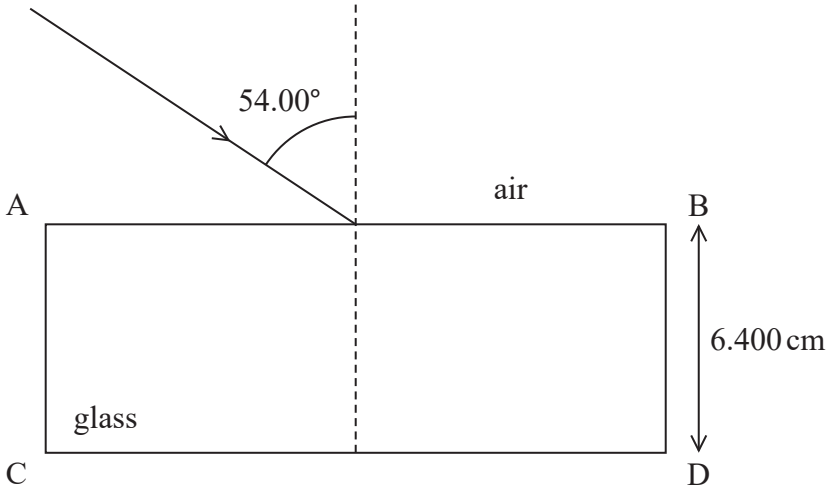

The red light and violet light from the incident ray arrive at slightly different points on side CD.

Determine the distance between these points.

(5)

Distance between points = ...

DO NOT WRITE IN THIS AREA
DO NOT WRITE IN THIS AREA
DO NOT WRITE IN THIS AREA

DO NOT WRITE IN THIS AREA
DO NOT WRITE IN THIS AREA
DO NOT WRITE IN THIS AREA

(b) White light is incident on a boundary between glass and air, as shown.

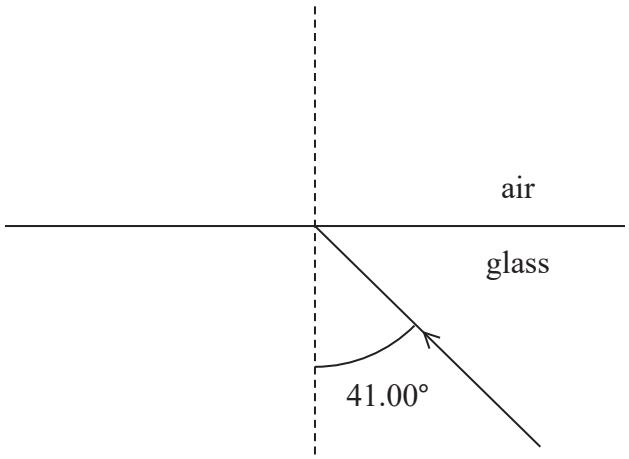

Explain what happens to the red light and the violet light when meeting the boundary.
Your answer should include calculations.

(4)

(Total for Question 13 = 9 marks)

14 A student connected the circuit shown. The battery has negligible internal resistance.

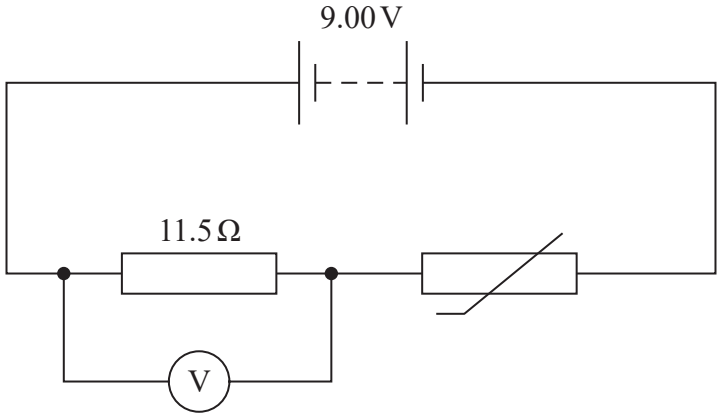

The graph shows how the resistance of the thermistor varies with temperature.

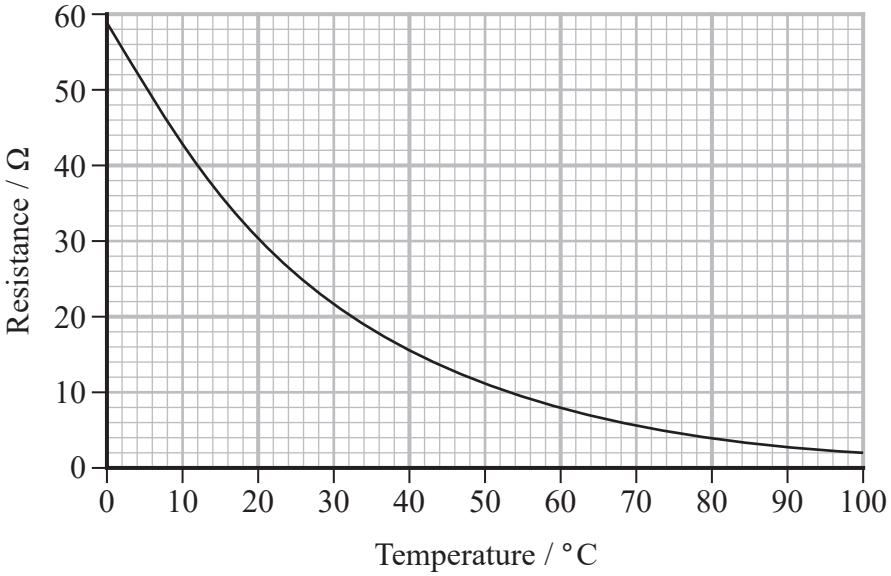

(a) The reading on the voltmeter is 3.42 V.

Determine the temperature of the thermistor.

(4)

Temperature = ...

DO NOT WRITE IN THIS AREA
DO NOT WRITE IN THIS AREA
DO NOT WRITE IN THIS AREA

DO NOT WRITE IN THIS AREA
DO NOT WRITE IN THIS AREA
DO NOT WRITE IN THIS AREA

(b) The student suggests that if the e.m.f. of the battery is doubled, the reading on the voltmeter will double.

Assess whether the student's suggestion is correct.

(4)

.....

.....

.....

.....

.....

.....

.....

.....

(Total for Question 14 = 8 marks)

15 A student used two sources, A and B, of electromagnetic radiation to investigate the photoelectric effect. Radiation from A has a photon energy of 2.0 eV.

(a) The radiation from B has a wavelength of 280 nm.

Show that this radiation has a photon energy of about 4.4 eV.

(4)

DO NOT WRITE IN THIS AREA
DO NOT WRITE IN THIS AREA
DO NOT WRITE IN THIS AREA

DO NOT WRITE IN THIS AREA
DO NOT WRITE IN THIS AREA
DO NOT WRITE IN THIS AREA

*(b) The student used the two sources of radiation to investigate the photoelectric effect for two different metals, copper and zinc.

The following statements were made by the student.

> When radiation of photon energy 2.0 eV from source A is directed towards either of the metal plates no electrons are released, even when the intensity of the radiation is increased.
>
> When radiation of photon energy 4.4 eV from source B is directed towards the copper plate, no electrons are released. However, when the radiation is directed towards the zinc plate, electrons are released. As the intensity of radiation is increased, electrons are released at a greater rate.

Explain the conclusions that can be made from these statements.

(6)

(Total for Question 15 = 10 marks)

16 When unpolarised light passes through a polarising filter, the light becomes plane polarised.

(a) Explain the difference between unpolarised and plane polarised light.

(3)

(b) An unpolarised light source is directed towards a screen. The intensity of radiation measured at the screen is $1.00\,W\,m^{-2}$.

Two polarising filters are placed between the light source and the screen.
Initially there is an angle of 0° between their planes of polarisation, as shown.

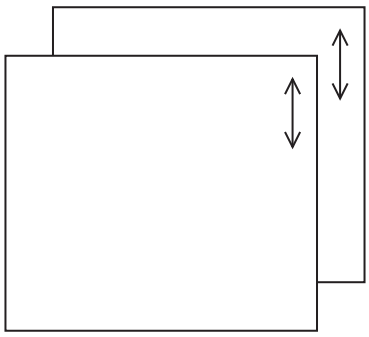

One of the polarising filters is then rotated, as shown.

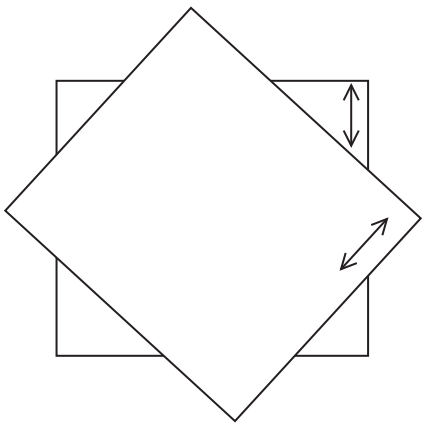

Sketch a graph to show how the intensity of light measured at the screen varies as the filter is rotated from 0° to 90°.

(3)

DO NOT WRITE IN THIS AREA
DO NOT WRITE IN THIS AREA
DO NOT WRITE IN THIS AREA

DO NOT WRITE IN THIS AREA
DO NOT WRITE IN THIS AREA
DO NOT WRITE IN THIS AREA

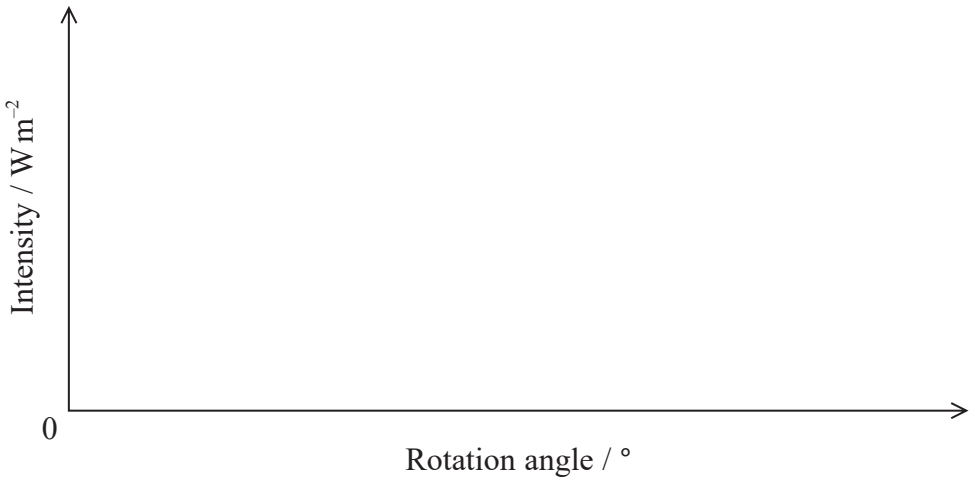

(c) Polarisation can be used to identify when some materials are under stress. Placing the material under stress causes the plane of polarisation of the light passing through the material to be rotated. The greater the stress, the greater the rotation of the plane of polarisation of the light.

A piece of transparent material under stress is positioned between two polarising filters. There is an angle of 90º between the planes of polarisation of the two polarising filters.

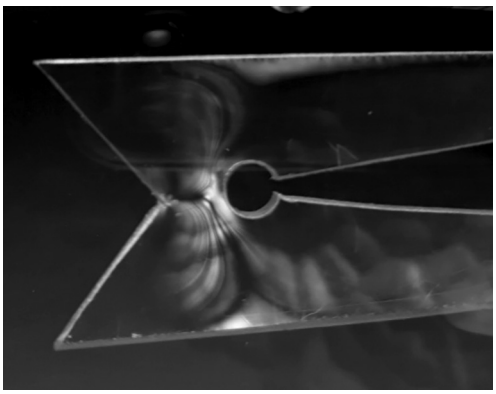

Explain how this photograph can be used to identify areas of the material with different amounts of stress.

(3)

.....

.....

.....

.....

.....

.....

(Total for Question 16 = 9 marks)

17 A student used the apparatus shown in Photograph 1 to determine the speed of sound in air.

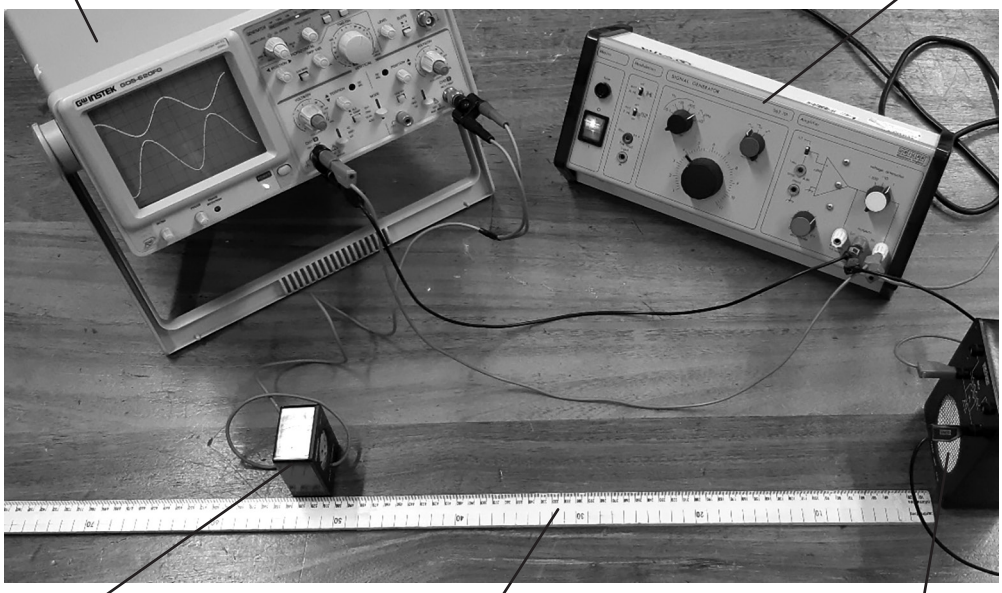

Photograph 1

The student switched on the signal generator. The oscilloscope showed one trace from the signal generator and another trace from the microphone.

Initially the peaks of one trace were directly above the troughs of the other trace, as shown in Photograph 2.

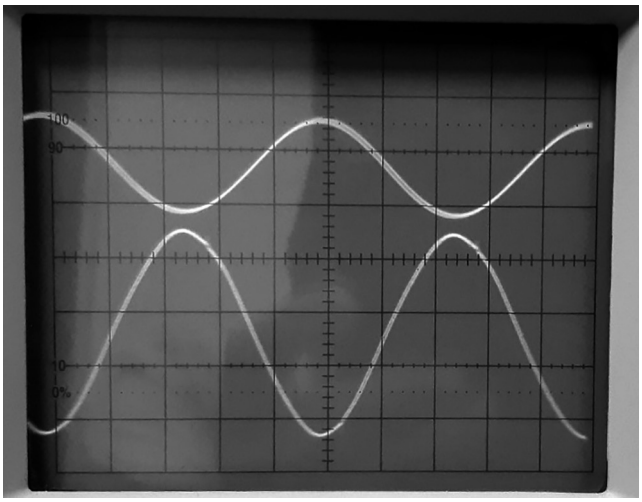

Photograph 2

The horizontal axis of the oscilloscope screen represents time. The number of milliseconds per division on the horizontal scale is known.

DO NOT WRITE IN THIS AREA
DO NOT WRITE IN THIS AREA
DO NOT WRITE IN THIS AREA

DO NOT WRITE IN THIS AREA
DO NOT WRITE IN THIS AREA
DO NOT WRITE IN THIS AREA

(a) Explain how the apparatus shown in Photograph 1 could be used to determine the speed of sound in air.

(5)

(b) The student changed the position of the microphone. The traces on the oscilloscope screen before and after changing the position of the microphone are shown in Photograph 2 and Photograph 3.

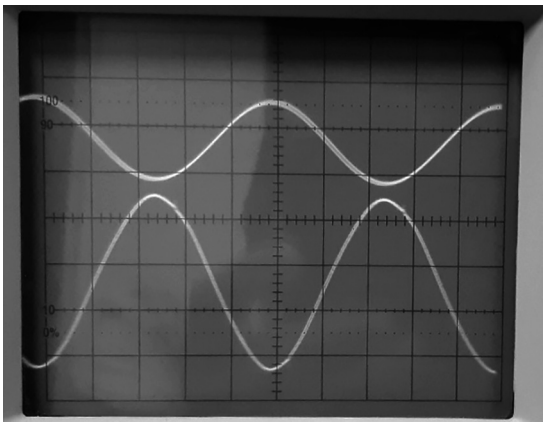

Photograph 2

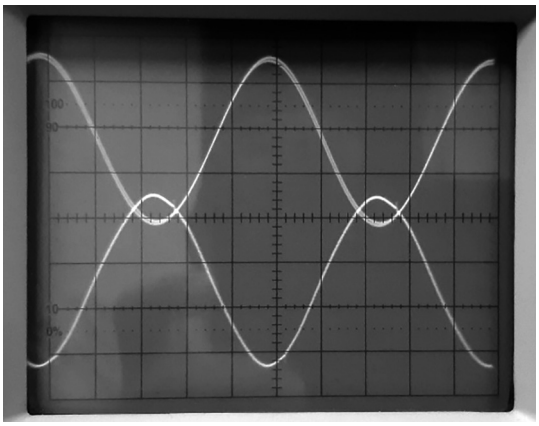

Photograph 3

Explain what change the student made to the position of the microphone between Photograph 2 and Photograph 3.

(3)

.....

.....

.....

.....

.....

.....

(Total for Question 17 = 8 marks)

DO NOT WRITE IN THIS AREA
DO NOT WRITE IN THIS AREA
DO NOT WRITE IN THIS AREA

DO NOT WRITE IN THIS AREA
DO NOT WRITE IN THIS AREA
DO NOT WRITE IN THIS AREA

BLANK PAGE

18 The circuit diagram shows three identical resistors and two switches, X and Y.
The battery has negligible internal resistance.

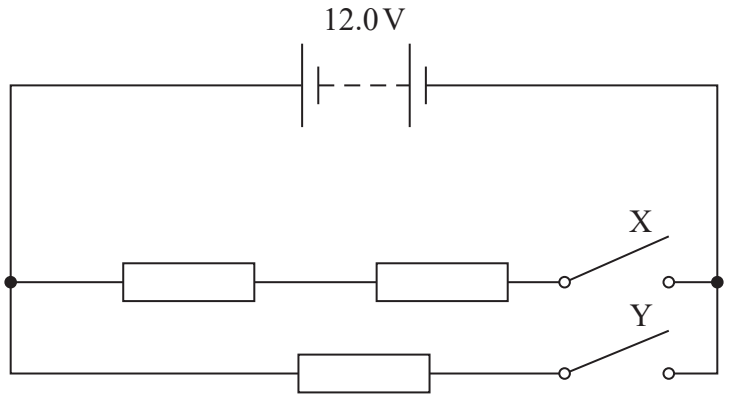

Each resistor consists of a wire of diameter 0.181 mm and length 55.0 cm. At room temperature, the resistivity of the wire is $1.10 \times 10^{-6}\,\Omega\,\text{m}$.

(a) Show that the resistance of one resistor at room temperature is about 24 Ω.

(3)

(b) A student suggests that the maximum power output from the resistors in this circuit will be greater than 12 W.

Assess whether the student's suggestion is correct.

(4)

DO NOT WRITE IN THIS AREA
DO NOT WRITE IN THIS AREA
DO NOT WRITE IN THIS AREA

DO NOT WRITE IN THIS AREA
DO NOT WRITE IN THIS AREA
DO NOT WRITE IN THIS AREA

(c) Switch X was open and switch Y was closed.

(i) Calculate the number of conduction electrons passing through the resistor every second immediately after switch Y was closed.

(3)

Number of electrons = ...

(ii) After switch Y had been closed for a few minutes, the power dissipated by the resistor decreased.

Explain why.

(3)

(Total for Question 18 = 13 marks)

TOTAL FOR SECTION B = 70 MARKS
TOTAL FOR PAPER = 80 MARKS

List of data, formulae and relationships

Acceleration of free fall	$g = 9.81\ \text{m s}^{-2}$	(close to Earth's surface)
Boltzmann constant	$k = 1.38 \times 10^{-23}\ \text{J K}^{-1}$	
Coulomb's law constant	$k = 1/4\pi\varepsilon_0$	
	$= 8.99 \times 10^9\ \text{N m}^2\ \text{C}^{-2}$	
Electron charge	$e = -1.60 \times 10^{-19}\ \text{C}$	
Electron mass	$m_e = 9.11 \times 10^{-31}\ \text{kg}$	
Electronvolt	$1\ \text{eV} = 1.60 \times 10^{-19}\ \text{J}$	
Gravitational constant	$G = 6.67 \times 10^{-11}\ \text{N m}^2\ \text{kg}^{-2}$	
Gravitational field strength	$g = 9.81\ \text{N kg}^{-1}$	(close to Earth's surface)
Permittivity of free space	$\varepsilon_0 = 8.85 \times 10^{-12}\ \text{F m}^{-1}$	
Planck constant	$h = 6.63 \times 10^{-34}\ \text{J s}$	
Proton mass	$m_p = 1.67 \times 10^{-27}\ \text{kg}$	
Speed of light in a vacuum	$c = 3.00 \times 10^8\ \text{m s}^{-1}$	
Stefan-Boltzmann constant	$\sigma = 5.67 \times 10^{-8}\ \text{W m}^{-2}\ \text{K}^{-4}$	
Unified atomic mass unit	$u = 1.66 \times 10^{-27}\ \text{kg}$	

Unit 1

Mechanics

Kinematic equations of motion

$$s = \frac{(u + v)t}{2}$$

$$v = u + at$$

$$s = ut + \frac{1}{2}at^2$$

$$v^2 = u^2 + 2as$$

Forces

$$\Sigma F = ma$$

$$g = \frac{F}{m}$$

$$W = mg$$

Momentum

$$p = mv$$

Moment of force

$$\text{moment} = Fx$$

Work and energy

$$\Delta W = F\Delta s$$

$$E_k = \frac{1}{2}mv^2$$

$$\Delta E_{grav} = mg\Delta h$$

Power

$$P = \frac{E}{t}$$

$$P = \frac{W}{t}$$

DO NOT WRITE IN THIS AREA
DO NOT WRITE IN THIS AREA
DO NOT WRITE IN THIS AREA

DO NOT WRITE IN THIS AREA
DO NOT WRITE IN THIS AREA
DO NOT WRITE IN THIS AREA

Efficiency

$$\text{efficiency} = \frac{\text{useful energy output}}{\text{total energy input}}$$

$$\text{efficiency} = \frac{\text{useful power output}}{\text{total power input}}$$

Materials

Density $\rho = \frac{m}{V}$

Stokes' law $F = 6\pi\eta r v$

Hooke's law $\Delta F = k\Delta x$

Elastic strain energy $\Delta E_{el} = \frac{1}{2} F \Delta x$

Young modulus $E = \frac{\sigma}{\varepsilon}$ where

Stress $\sigma = \frac{F}{A}$

Strain $\varepsilon = \frac{\Delta x}{x}$

Unit 2

Waves

Wave speed	$v = f\lambda$
Speed of a transverse wave on a string	$v = \sqrt{\frac{T}{\mu}}$
Intensity of radiation	$I = \frac{P}{A}$
Refractive index	$n_1 \sin\theta_1 = n_2 \sin\theta_2$
	$n = \frac{c}{v}$
Critical angle	$\sin C = \frac{1}{n}$
Diffraction grating	$n\lambda = d\sin\theta$

Electricity

Potential difference	$V = \frac{W}{Q}$
Resistance	$R = \frac{V}{I}$
Electrical power, energy	$P = VI$
	$P = I^2R$
	$P = \frac{V^2}{R}$
	$W = VIt$
Resistivity	$R = \frac{\rho l}{A}$
Current	$I = \frac{\Delta Q}{\Delta t}$
	$I = nqvA$
Resistors in series	$R = R_1 + R_2 + R_3$
Resistors in parallel	$\frac{1}{R} = \frac{1}{R_1} + \frac{1}{R_2} + \frac{1}{R_3}$

Particle nature of light

Photon model	$E = hf$
Einstein's photoelectric equation	$hf = \phi + \frac{1}{2}mv^2_{max}$
de Broglie wavelength	$\lambda = \frac{h}{p}$

DO NOT WRITE IN THIS AREA
DO NOT WRITE IN THIS AREA
DO NOT WRITE IN THIS AREA

DO NOT WRITE IN THIS AREA
DO NOT WRITE IN THIS AREA
DO NOT WRITE IN THIS AREA

BLANK PAGE

DO NOT WRITE IN THIS AREA
DO NOT WRITE IN THIS AREA
DO NOT WRITE IN THIS AREA

BLANK PAGE