GradeMax

Please check the examination details below before entering your candidate information

Candidate surname	Other names

Pearson Edexcel
International Advanced Level

Centre Number | Candidate Number

Time 1 hour 20 minutes

Paper reference **WPH13/01**

Physics

International Advanced Subsidiary/Advanced Level
Unit 3: Practical Skills in Physics I

You must have:
Scientific calculator, ruler

Total Marks

Instructions

- Use **black** ink or **black** ball-point pen.
- **Fill in the boxes** at the top of this page with your name, centre number and candidate number.
- Answer **all** questions.
- Answer the questions in the spaces provided – *there may be more space than you need.*
- **Show all your working out in calculations and include units where appropriate.**

Information

- The total mark for this paper is 50.
- The marks for **each** question are shown in brackets – *use this as a guide as to how much time to spend on each question.*
- The list of data, formulae and relationships is printed at the end of this booklet.

Advice

- Read each question carefully before you start to answer it.
- Try to answer every question.
- Check your answers if you have time at the end.
- Good luck with your examination.

Turn over ▶

P66615A

©2021 Pearson Education Ltd.

1/1/1/1/

P 6 6 6 1 5 A 0 1 1 6

Pearson

Answer ALL questions.

1 A student planned an experiment to determine the density of acetate.

She was given a pack of 50 acetate sheets and had access to standard laboratory apparatus.

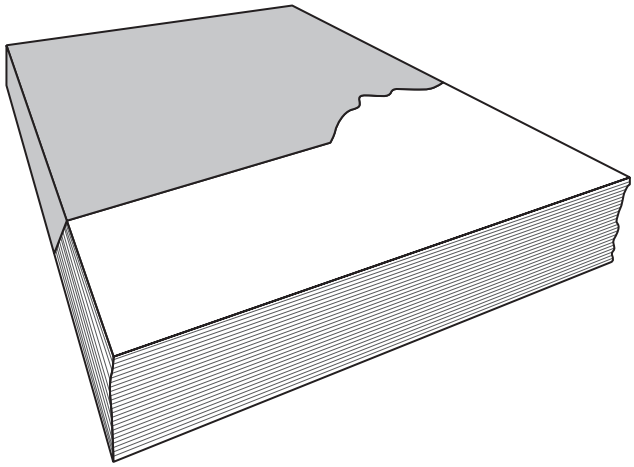

The approximate dimensions of a single sheet of acetate are given on the pack.

Length	30 cm
Width	21 cm
Thickness	0.15 mm

The total mass of 50 acetate sheets is approximately 670 g.

(a) To determine the density of acetate, the student needed to take measurements.

Complete the table below.

(1)

Quantity to be measured	Measuring instrument	Resolution
Mass	Balance	0.1 g
Length and width	Metre rule	
Thickness	Vernier calipers	

DO NOT WRITE IN THIS AREA
DO NOT WRITE IN THIS AREA
DO NOT WRITE IN THIS AREA

DO NOT WRITE IN THIS AREA
DO NOT WRITE IN THIS AREA
DO NOT WRITE IN THIS AREA

(b) Describe a method to determine an accurate value for the density of acetate.

(4)

(c) The student then followed the same method using thicker sheets of acetate.

Explain why using thicker sheets of acetate would reduce the uncertainty in her value for density.

(2)

(Total for Question 1 = 7 marks)

2 A student determined the speed of sound in air using a standing wave.

The student used a tuning fork to create a sound wave in the column of air inside a plastic tube. He placed the plastic tube into a measuring cylinder of water so he could adjust the length *l* of the column of air.

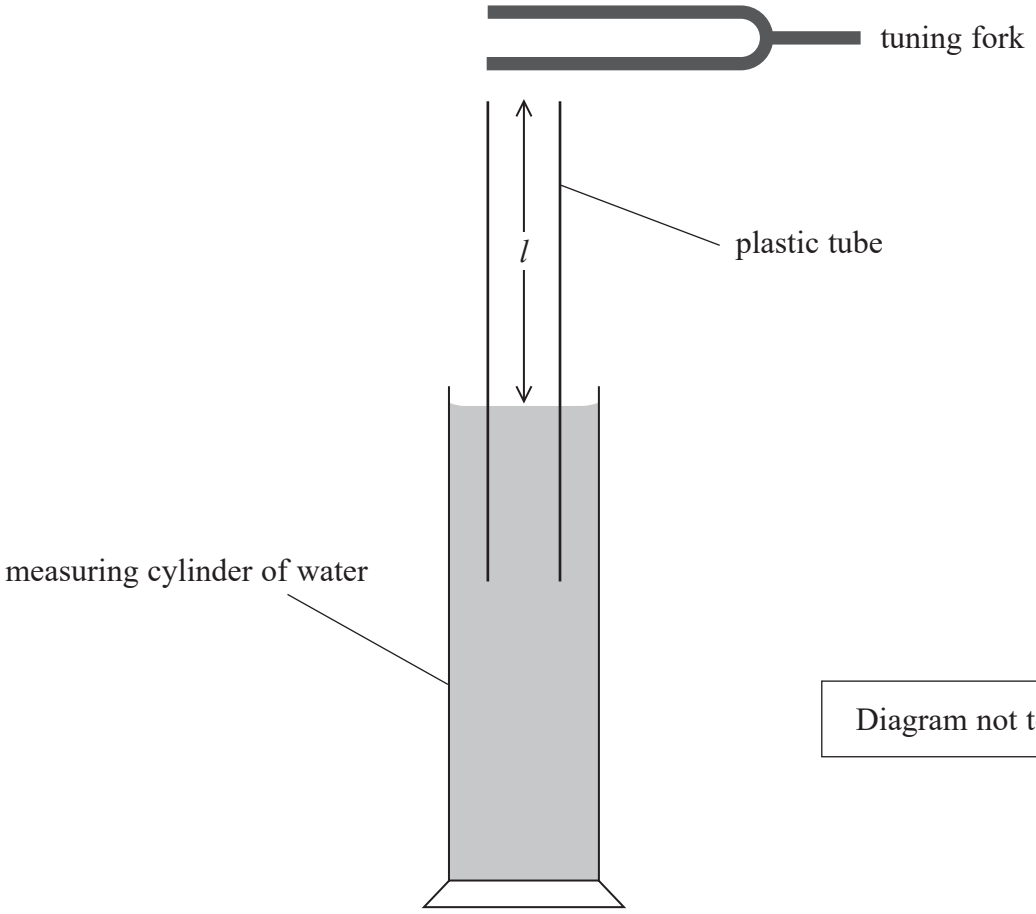

Diagram not to scale

The student adjusted *l* until the loudest sound was heard, indicating that a standing wave had formed. He marked the water level on the plastic tube and measured *l*.

He repeated this process several times and recorded the results.

l / cm	18.4	18.0	19.2	19.4	19.2

(a) Suggest two reasons for the variation in the lengths the student measured.

(2)

.....

.....

.....

.....

DO NOT WRITE IN THIS AREA
DO NOT WRITE IN THIS AREA
DO NOT WRITE IN THIS AREA

DO NOT WRITE IN THIS AREA
DO NOT WRITE IN THIS AREA
DO NOT WRITE IN THIS AREA

(b) (i) Calculate the mean value of l.

(2)

Mean value of l = ...

(ii) Calculate the percentage uncertainty in l.

(2)

Percentage uncertainty = ...

(c) The frequency of the tuning fork was 440 Hz. The standing wave produced had a wavelength $4l$.

Calculate the speed of sound in air.

(2)

Speed of sound = ...

(d) The percentage uncertainty in the student's value for the speed of sound is equal to the percentage uncertainty in l.

The accepted value for the speed of sound in air is 343 $m\,s^{-1}$.

Comment on whether the student's value is consistent with the accepted value for the speed of sound in air.

(2)

(Total for Question 2 = 10 marks)

BLANK PAGE

DO NOT WRITE IN THIS AREA
DO NOT WRITE IN THIS AREA
DO NOT WRITE IN THIS AREA

DO NOT WRITE IN THIS AREA
DO NOT WRITE IN THIS AREA
DO NOT WRITE IN THIS AREA

3 A student determined the viscosity of a liquid. The student measured the force required to pull a small sphere upwards through the liquid at a constant speed.

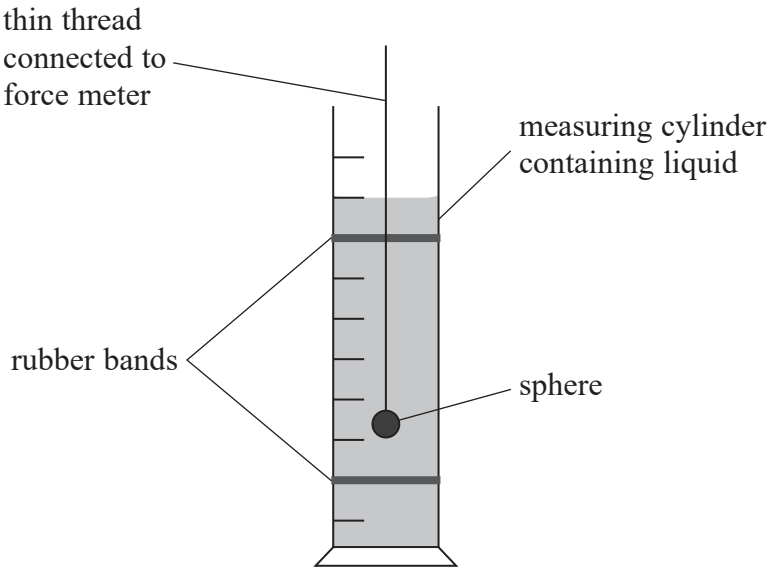

(a) The student measured the diameter of the sphere using a micrometer.

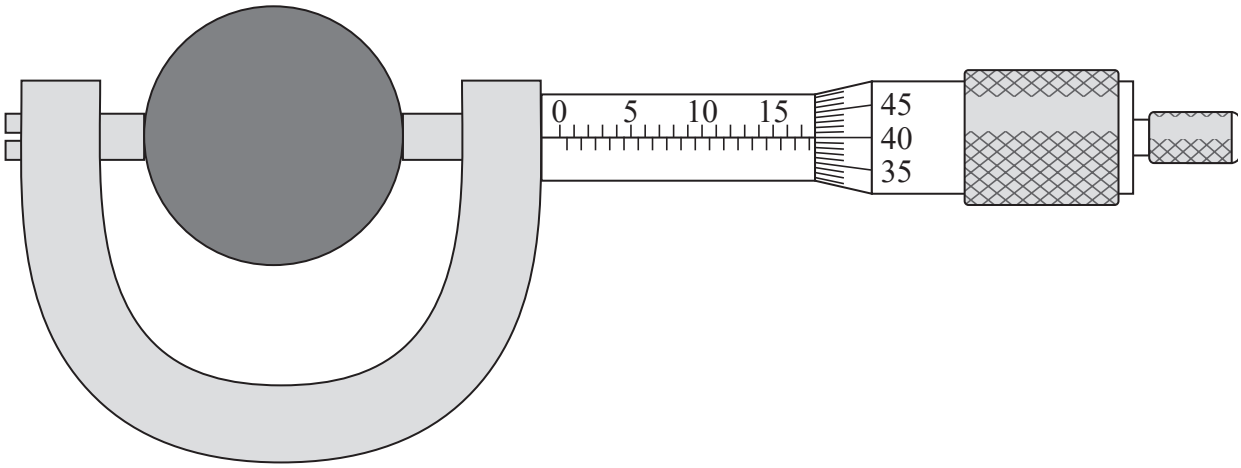

Calculate the percentage uncertainty in the diameter of the sphere shown on the micrometer.

(3)

.....

.....

.....

Percentage uncertainty = ...

(b) State one precaution that should be taken before using a micrometer.

(1)

.....

.....

(c) The student measured the value of force when the sphere was suspended and stationary in the liquid. The force meter used is shown in the photograph.



When the sphere was stationary the reading on the force meter was 0.20 N.

The student then moved the force meter upwards so that the sphere moved at a constant speed of 0.32 m s^{-1}. The reading on the force meter was 0.29 N.

DO NOT WRITE IN THIS AREA
DO NOT WRITE IN THIS AREA
DO NOT WRITE IN THIS AREA

DO NOT WRITE IN THIS AREA
DO NOT WRITE IN THIS AREA
DO NOT WRITE IN THIS AREA

(i) Explain why it was necessary to measure the force when the sphere was stationary and the force when the sphere was moving at constant speed.

(3)

(ii) Calculate the viscosity η of the liquid.

(3)

η = ... Pa s

(d) The resolution of the force meter was 0.01 N.
The distance moved between the rubber bands was 25.0 cm.
The time measured was 0.78 s.
The percentage uncertainty in the measurement of the diameter was negligible.

Assess which of these measurements was the most significant source of uncertainty in the value of viscosity.

(4)

(Total for Question 3 = 14 marks)

4 The activation potential difference (p.d.) is the minimum p.d for photons to be emitted from a light emitting diode (LED). A student measured the activation p.d. for different LEDs.

The relationship between activation p.d. and wavelength is given by the equation

$$eV_a = \frac{hc}{\lambda} + W$$

where

V_a is the activation p.d.
λ is the wavelength of the photons emitted by the LED
W is a constant representing the work done by an electron passing through an LED.

(a) Explain why a graph of V_a against $1/\lambda$ should give a straight line.

(3)

.....

.....

.....

.....

(b) The student recorded his values of activation p.d. and the manufacturer's corresponding values of wavelength.

$\lambda / 10^{-7}$ m	V_a / V	
6.60	1.82	
6.12	1.97	
5.92	2.02	
5.85	2.07	
5.30	2.31	
4.70	2.58	

(i) Complete the table with the corresponding values of $1/\lambda$.

(2)

DO NOT WRITE IN THIS AREA
DO NOT WRITE IN THIS AREA
DO NOT WRITE IN THIS AREA

(ii) Plot a graph of V_a on the y-axis against $1/\lambda$ on the x-axis.

(5)

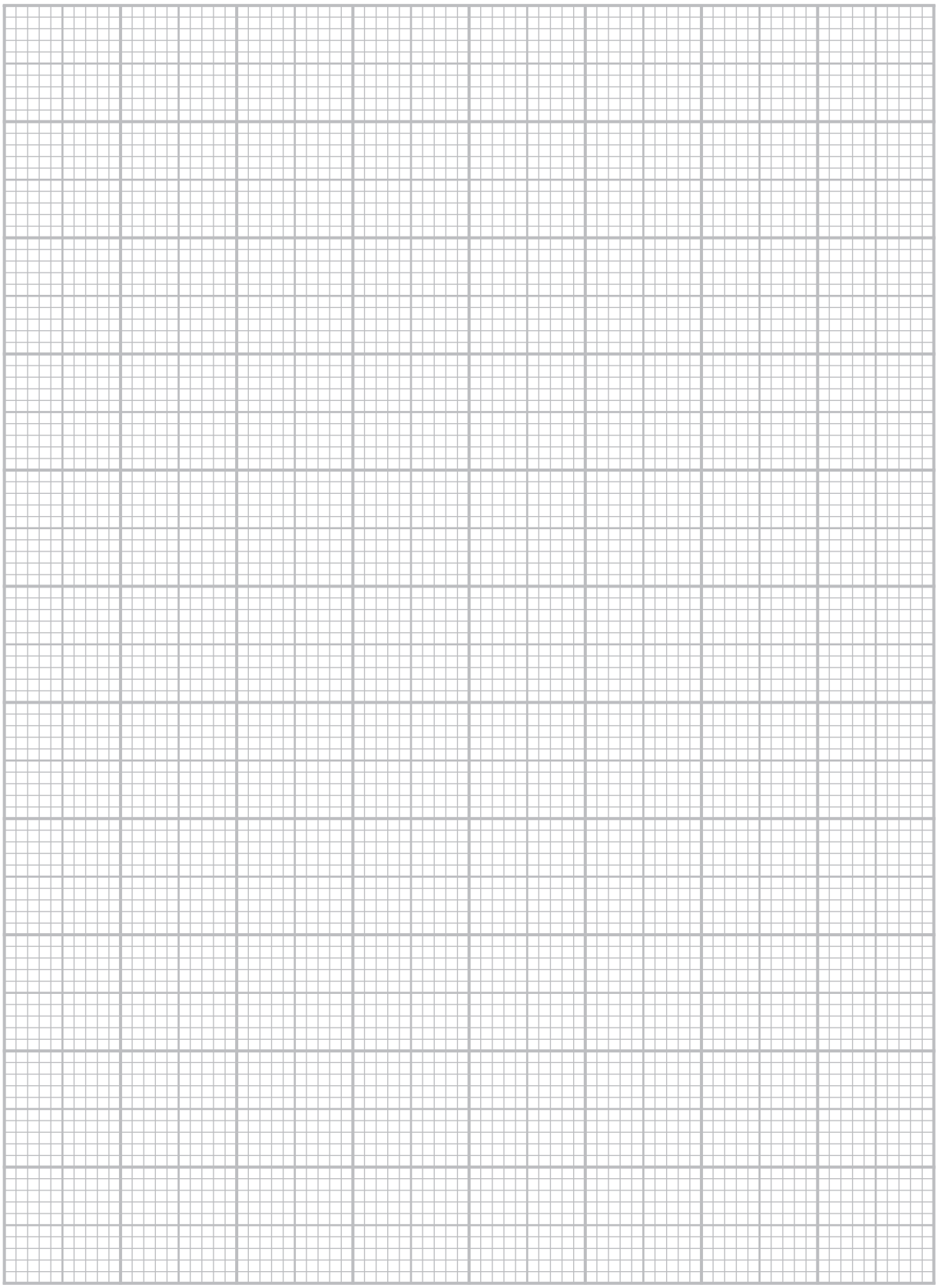

DO NOT WRITE IN THIS AREA
DO NOT WRITE IN THIS AREA
DO NOT WRITE IN THIS AREA

(iii) Determine the value of the Planck constant given by the student's data.

(3)

Planck constant = ...

(iv) The student states that the value for the Planck constant obtained from the graph is accurate.

Evaluate the student's statement.

(2)

(c) Each LED in the investigation emits a narrow range of wavelengths.

The wavelength value stated by the manufacturer is the wavelength of light that is emitted with maximum intensity when the LED is at normal brightness.

The wavelength emitted at the activation p.d. is not equal to the manufacturer's value.

Discuss whether this affects the accuracy of the value of the Planck constant obtained.

(4)

(Total for Question 4 = 19 marks)

TOTAL FOR PAPER = 50 MARKS

DO NOT WRITE IN THIS AREA
DO NOT WRITE IN THIS AREA
DO NOT WRITE IN THIS AREA

DO NOT WRITE IN THIS AREA
DO NOT WRITE IN THIS AREA
DO NOT WRITE IN THIS AREA

BLANK PAGE

List of data, formulae and relationships

Acceleration of free fall	$g = 9.81\ \text{m s}^{-2}$	(close to Earth's surface)
Electron charge	$e = -1.60 \times 10^{-19}\ \text{C}$	
Electron mass	$m_e = 9.11 \times 10^{-31}\ \text{kg}$	
Electronvolt	$1\ \text{eV} = 1.60 \times 10^{-19}\ \text{J}$	
Gravitational field strength	$g = 9.81\ \text{N kg}^{-1}$	(close to Earth's surface)
Planck constant	$h = 6.63 \times 10^{-34}\ \text{J s}$	
Speed of light in a vacuum	$c = 3.00 \times 10^{8}\ \text{m s}^{-1}$	

Unit 1

Mechanics

Kinematic equations of motion

$$s = \frac{(u + v)t}{2}$$

$$v = u + at$$

$$s = ut + \frac{1}{2}at^2$$

$$v^2 = u^2 + 2as$$

Forces

$$\Sigma F = ma$$

$$g = \frac{F}{m}$$

$$W = mg$$

Momentum

$$p = mv$$

Moment of force

$$= Fx$$

Work and energy

$$\Delta W = F\Delta s$$

$$E_k = \frac{1}{2}mv^2$$

$$\Delta E_{grav} = mg\Delta h$$

Power

$$P = \frac{E}{t}$$

$$P = \frac{W}{t}$$

Efficiency

$$\text{efficiency} = \frac{\text{useful energy output}}{\text{total energy input}}$$

$$\text{efficiency} = \frac{\text{useful power output}}{\text{total power input}}$$

DO NOT WRITE IN THIS AREA
DO NOT WRITE IN THIS AREA
DO NOT WRITE IN THIS AREA

DO NOT WRITE IN THIS AREA
DO NOT WRITE IN THIS AREA
DO NOT WRITE IN THIS AREA

Materials

Density $\rho = \frac{m}{V}$

Stokes' law $F = 6\pi\eta r v$

Hooke's law $\Delta F = k\Delta x$

Elastic strain energy $\Delta E_{el} = \frac{1}{2} F \Delta x$

Young modulus $E = \frac{\sigma}{\varepsilon}$ where

Stress $\sigma = \frac{F}{A}$

Strain $\varepsilon = \frac{\Delta x}{x}$

Unit 2

Waves

Wave speed	$v = f\lambda$
Speed of a transverse wave on a string	$v = \sqrt{\frac{T}{\mu}}$
Intensity of radiation	$I = \frac{P}{A}$
Refractive index	$n_1 \sin\theta_1 = n_2 \sin\theta_2$
	$n = \frac{c}{v}$
Critical angle	$\sin C = \frac{1}{n}$
Diffraction grating	$n\lambda = d\sin\theta$

Electricity

Potential difference	$V = \frac{W}{Q}$
Resistance	$R = \frac{V}{I}$
Electrical power, energy	$P = VI$
	$P = I^2R$
	$P = \frac{V^2}{R}$
	$W = VIt$
Resistivity	$R = \frac{\rho l}{A}$
Current	$I = \frac{\Delta Q}{\Delta t}$
	$I = nqvA$
Resistors in series	$R = R_1 + R_2 + R_3$
Resistors in parallel	$\frac{1}{R} = \frac{1}{R_1} + \frac{1}{R_2} + \frac{1}{R_3}$

Particle nature of light

Photon model	$E = hf$
Einstein's photoelectric equation	$hf = \phi + \frac{1}{2}mv^2_{max}$
de Broglie wavelength	$\lambda = \frac{h}{p}$

DO NOT WRITE IN THIS AREA
DO NOT WRITE IN THIS AREA
DO NOT WRITE IN THIS AREA