GradeMax

Subject code
Pearson Edexcel International Advanced Level
In Physics (WPH16)
Subject title
Unit 6: Paper 1 Practical Skills in Physics II

Monday 10 May 2021

NOTICE TO CANDIDATES

Please be advised that there is a printing error on page 13 of this paper.

In Q4 (c) (iii) the question should read:

Show that the uncertainty in $d^2 + (t - x)^2$ is approximately 0.11 cm^2.

All other questions/figures on the paper have been printed correctly.

Please accept our apologies for this error.

Do NOT write on this notice, it will not be marked.
Please write all responses on the Question Paper.
Please do NOT return the erratum notice to Pearson.

P67822A

GradeMax

Please check the examination details below before entering your candidate information

Candidate surname	Other names

Pearson Edexcel
International Advanced Level

Centre Number | Candidate Number

Time 1 hour 20 minutes

Paper reference **WPH16/01**

Physics

International Advanced Level
UNIT 6: Practical Skills in Physics II

You must have:
Scientific calculator, ruler

Total Marks

Instructions

- Use **black** ink or ball-point pen.
- **Fill in the boxes** at the top of this page with your name, centre number and candidate number.
- Answer **all** questions.
- Answer the questions in the spaces provided – *there may be more space than you need.*
- **Show all your working out in calculations and include units where appropriate.**

Information

- The total mark for this paper is 50.
- The marks for **each** question are shown in brackets – *use this as a guide as to how much time to spend on each question.*
- The list of data, formulae and relationships is printed at the end of this booklet.

Advice

- Read each question carefully before you start to answer it.
- Try to answer every question.
- Check your answers if you have time at the end.
- Good luck with your examination.

Turn over ▶

P67822A

©2021 Pearson Education Ltd.

1/1/1/1/

P 6 7 8 2 2 A 0 1 2 4

Pearson

Answer ALL questions.

1 The time period of a rotating wheel can be determined using the apparatus shown.

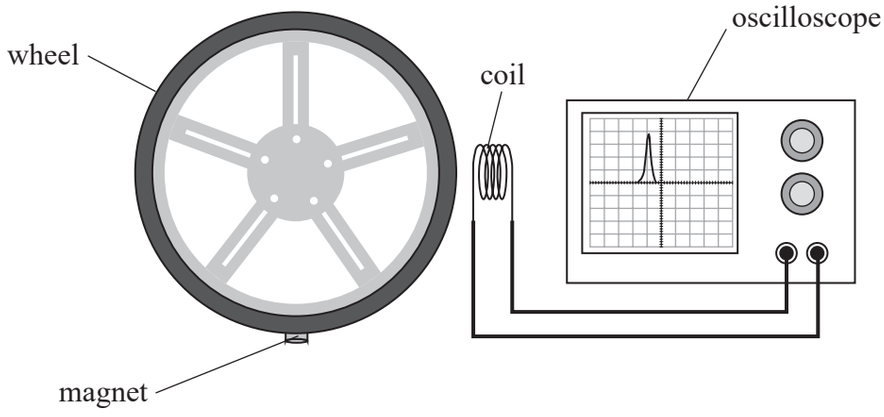

A magnet is attached to the edge of the wheel. When the magnet passes the coil, a single pulse is displayed on the oscilloscope screen.

The horizontal axis of the oscilloscope screen represents time. The number of milliseconds per division on the horizontal scale can be adjusted.

(a) As the wheel rotates, a series of pulses is displayed as shown.

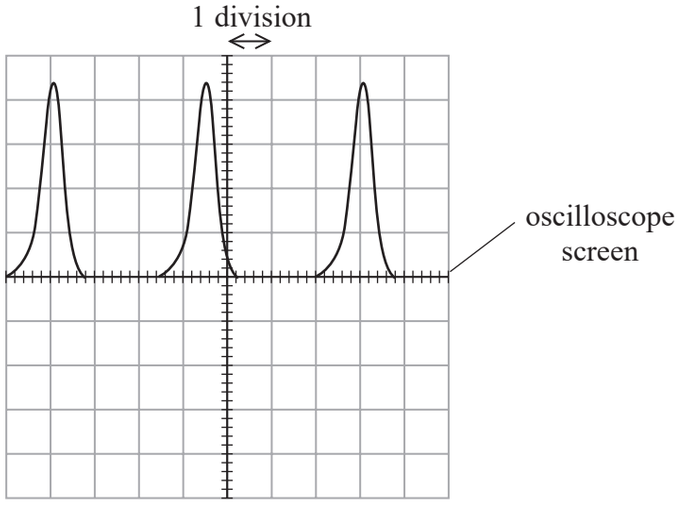

Describe how a value of the time period should be determined from these pulses.

(3)

.....

.....

.....

.....

.....

DO NOT WRITE IN THIS AREA
DO NOT WRITE IN THIS AREA
DO NOT WRITE IN THIS AREA
DO NOT WRITE IN THIS AREA
DO NOT WRITE IN THIS AREA
DO NOT WRITE IN THIS AREA

DO NOT WRITE IN THIS AREA
DO NOT WRITE IN THIS AREA
DO NOT WRITE IN THIS AREA
DO NOT WRITE IN THIS AREA
DO NOT WRITE IN THIS AREA
DO NOT WRITE IN THIS AREA

(b) When the wheel is tested, the speed of the magnet is 22.2 m s^{-1}.

The oscilloscope can be adjusted to give the following values for the horizontal scale.

millisecond per division	1	2	5	10

Explain which of these scales would display two complete pulses on the screen.

wheel diameter = 25.4 cm

(4)

.....

.....

.....

.....

.....

.....

.....

.....

(Total for Question 1 = 7 marks)

2 The specific latent heat of vaporisation L of water can be determined using the apparatus shown.

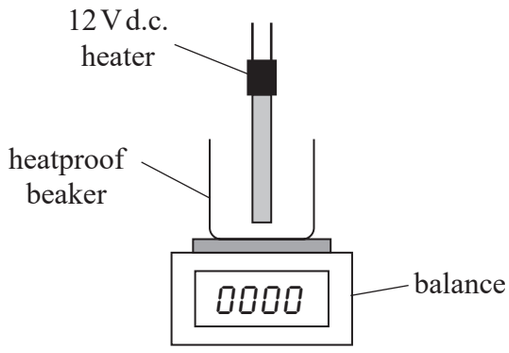

(a) Devise a plan to determine the value of L using a graphical method.
You should include a circuit diagram and any additional apparatus required.

(6)

DO NOT WRITE IN THIS AREA
DO NOT WRITE IN THIS AREA
DO NOT WRITE IN THIS AREA
DO NOT WRITE IN THIS AREA
DO NOT WRITE IN THIS AREA
DO NOT WRITE IN THIS AREA

(b) One significant source of error in this experiment is the uncertainty in the mass reading due to the water moving as it boils.

Explain how another significant source of error affects the value of L.

(3)

.....

.....

.....

.....

.....

.....

(Total for Question 2 = 9 marks)

DO NOT WRITE IN THIS AREA
DO NOT WRITE IN THIS AREA
DO NOT WRITE IN THIS AREA
DO NOT WRITE IN THIS AREA
DO NOT WRITE IN THIS AREA
DO NOT WRITE IN THIS AREA

GradeMax

BLANK PAGE

DO NOT WRITE IN THIS AREA
DO NOT WRITE IN THIS AREA
DO NOT WRITE IN THIS AREA
DO NOT WRITE IN THIS AREA
DO NOT WRITE IN THIS AREA
DO NOT WRITE IN THIS AREA

3 A student investigated the horizontal oscillations of a trolley between two springs using the apparatus shown.

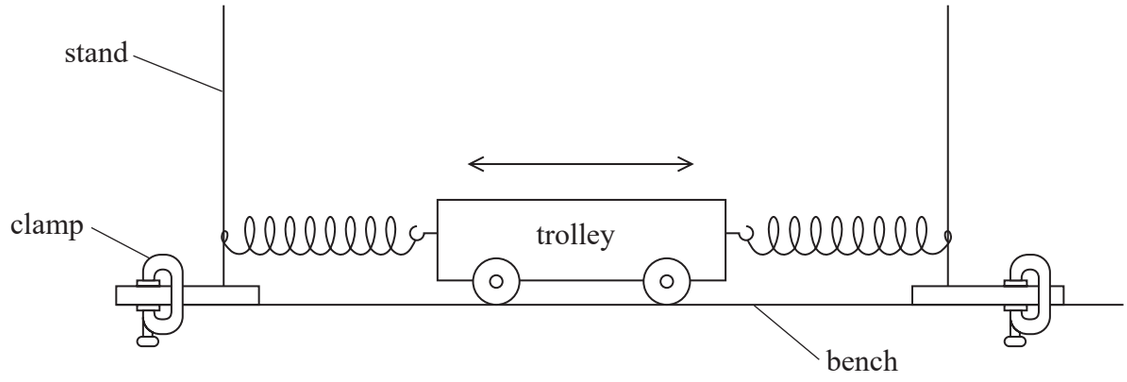

(a) The student used a stop clock to time the oscillations.

(i) Describe how he should modify the equipment to make his measurements as accurate as possible.

(2)

.....

.....

.....

.....

(ii) Describe two techniques he should use to reduce the uncertainty in the value of the time period.

(2)

.....

.....

.....

.....

DO NOT WRITE IN THIS AREA
DO NOT WRITE IN THIS AREA
DO NOT WRITE IN THIS AREA
DO NOT WRITE IN THIS AREA
DO NOT WRITE IN THIS AREA
DO NOT WRITE IN THIS AREA

(b) The student added masses to the trolley. He measured the total mass M of the trolley and masses. He recorded the following values of the time period T for each value of M.

M/kg	T/s		
0.800	0.78		
1.300	1.01		
1.800	1.18		
2.300	1.34		
2.800	1.49		
3.300	1.60		

(i) Plot a graph of log T against log M on the grid opposite. Use the additional columns in the table to record your processed data.

(6)

(ii) The student predicts that the relationship between T and M is given by

$$T = 2\pi\sqrt{\frac{M}{k}}$$

where k is the spring constant.

Discuss the validity of this prediction.

(5)

DO NOT WRITE IN THIS AREA DO NOT WRITE IN THIS AREA DO NOT WRITE IN THIS AREA DO NOT WRITE IN THIS AREA

GradeMax

DO NOT WRITE IN THIS AREA
DO NOT WRITE IN THIS AREA
DO NOT WRITE IN THIS AREA
DO NOT WRITE IN THIS AREA
DO NOT WRITE IN THIS AREA
DO NOT WRITE IN THIS AREA

(iii) Determine the value of k.

(3)

.....

.....

.....

.....

.....

.....

$k =$ .....

(Total for Question 3 = 18 marks)

DO NOT WRITE IN THIS AREA
DO NOT WRITE IN THIS AREA
DO NOT WRITE IN THIS AREA
DO NOT WRITE IN THIS AREA
DO NOT WRITE IN THIS AREA
DO NOT WRITE IN THIS AREA

DO NOT WRITE IN THIS AREA
DO NOT WRITE IN THIS AREA
DO NOT WRITE IN THIS AREA
DO NOT WRITE IN THIS AREA
DO NOT WRITE IN THIS AREA
DO NOT WRITE IN THIS AREA

4 A student measured some dimensions of a thick, circular lens. The diagram shows approximate values of these dimensions.

$x \approx 2\,\text{mm}$
$t \approx 1\,\text{cm}$
$d \approx 5\,\text{cm}$

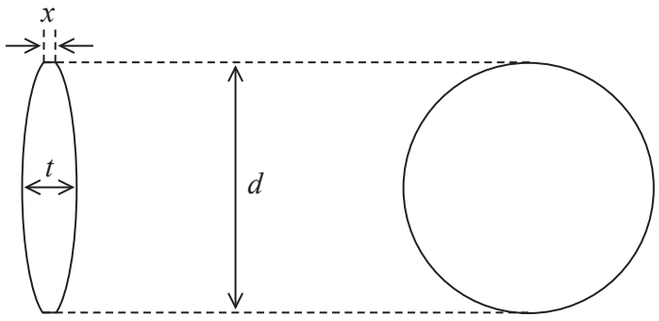

Diagram not to scale

(a) (i) The student had a set of Vernier calipers and a micrometer screw gauge, as shown in the photograph.

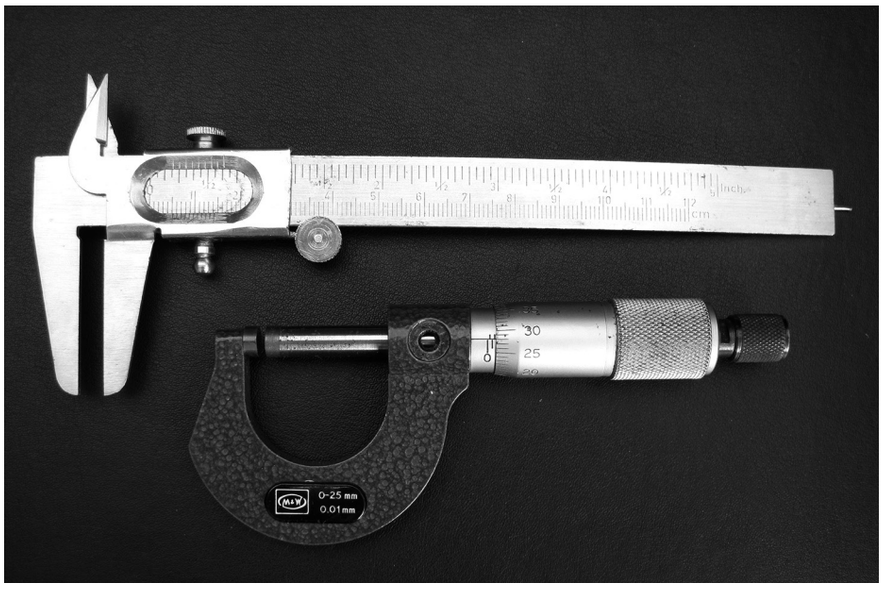

State, with a reason, which of these measuring instruments she should use to measure the diameter d of the lens.

(1)

.....

.....

(ii) The student recorded the following values of d, measured at different points across the lens.

5.10 cm 5.11 cm 5.10 cm

She concluded that because her measurements were precise, they must be accurate.

Explain why this conclusion may not be justified.

(2)

.....

.....

.....

.....

(b) The student measured the thickness x of the edge of the lens using the micrometer screw gauge.

She recorded the following measurements.

x / mm				
2.11	2.10	2.13	2.14	2.11

Calculate the mean value of x in mm and its uncertainty.

(2)

.....

.....

.....

.....

Mean value of x = ... mm ± ..... mm

DO NOT WRITE IN THIS AREA
DO NOT WRITE IN THIS AREA
DO NOT WRITE IN THIS AREA
DO NOT WRITE IN THIS AREA
DO NOT WRITE IN THIS AREA
DO NOT WRITE IN THIS AREA

(c) The refractive index n of the material of the lens can be determined using

$$n = 1 + \frac{d^2 + (t - x)^2}{8f(t - x)}$$

where f is the focal length of the lens.

(i) Determine the value of n.

$d = 5.10\,\text{cm} \pm 0.01\,\text{cm}$

$t = 8.30\,\text{mm} \pm 0.01\,\text{mm}$

$f = 9.8\,\text{cm} \pm 0.3\,\text{cm}$

(2)

$n =$ .....

(ii) Show that the percentage uncertainty in $(t - x)$ is approximately 0.5%.

(2)

(iii) Show that the uncertainty in $d^2 + (t - x)^2$ is approximately 0.11 cm.

(4)

DO NOT WRITE IN THIS AREA
DO NOT WRITE IN THIS AREA
DO NOT WRITE IN THIS AREA
DO NOT WRITE IN THIS AREA
DO NOT WRITE IN THIS AREA
DO NOT WRITE IN THIS AREA

(iv) The table shows data for some materials used to make lenses.

Material	Pyrex	Crown glass	Flint glass
Refractive index	1.47	1.52	1.66

Deduce whether this lens could be made from one of these materials.

(3)

(Total for Question 4 = 16 marks)

TOTAL FOR PAPER = 50 MARKS

DO NOT WRITE IN THIS AREA
DO NOT WRITE IN THIS AREA
DO NOT WRITE IN THIS AREA
DO NOT WRITE IN THIS AREA
DO NOT WRITE IN THIS AREA
DO NOT WRITE IN THIS AREA

DO NOT WRITE IN THIS AREA
DO NOT WRITE IN THIS AREA
DO NOT WRITE IN THIS AREA
DO NOT WRITE IN THIS AREA
DO NOT WRITE IN THIS AREA
DO NOT WRITE IN THIS AREA

List of data, formulae and relationships

Acceleration of free fall	$g = 9.81\ \text{m s}^{-2}$	(close to Earth's surface)
Boltzmann constant	$k = 1.38 \times 10^{-23}\ \text{J K}^{-1}$	
Coulomb's law constant	$k = 1/4\pi\varepsilon_0$	
	$= 8.99 \times 10^9\ \text{N m}^2\ \text{C}^{-2}$	
Electron charge	$e = -1.60 \times 10^{-19}\ \text{C}$	
Electron mass	$m_e = 9.11 \times 10^{-31}\ \text{kg}$	
Electronvolt	$1\ \text{eV} = 1.60 \times 10^{-19}\ \text{J}$	
Gravitational constant	$G = 6.67 \times 10^{-11}\ \text{N m}^2\ \text{kg}^{-2}$	
Gravitational field strength	$g = 9.81\ \text{N kg}^{-1}$	(close to Earth's surface)
Permittivity of free space	$\varepsilon_0 = 8.85 \times 10^{-12}\ \text{F m}^{-1}$	
Planck constant	$h = 6.63 \times 10^{-34}\ \text{J s}$	
Proton mass	$m_p = 1.67 \times 10^{-27}\ \text{kg}$	
Speed of light in a vacuum	$c = 3.00 \times 10^8\ \text{m s}^{-1}$	
Stefan-Boltzmann constant	$\sigma = 5.67 \times 10^{-8}\ \text{W m}^{-2}\ \text{K}^{-4}$	
Unified atomic mass unit	$u = 1.66 \times 10^{-27}\ \text{kg}$	

Unit 1

Mechanics

Kinematic equations of motion

$$s = \frac{(u + v)t}{2}$$

$$v = u + at$$

$$s = ut + \frac{1}{2}at^2$$

$$v^2 = u^2 + 2as$$

Forces

$$\Sigma F = ma$$

$$g = \frac{F}{m}$$

$$W = mg$$

Momentum

$$p = mv$$

Moment of force

$$\text{moment} = Fx$$

Work and energy

$$\Delta W = F\Delta s$$

$$E_k = \frac{1}{2}mv^2$$

$$\Delta E_{grav} = mg\Delta h$$

Power

$$P = \frac{E}{t}$$

$$P = \frac{W}{t}$$

Efficiency

$$\text{efficiency} = \frac{\text{useful energy output}}{\text{total energy input}}$$

$$\text{efficiency} = \frac{\text{useful power output}}{\text{total power input}}$$

Materials

Density $\rho = \frac{m}{V}$

Stokes' law $F = 6\pi\eta r v$

Hooke's law $\Delta F = k\Delta x$

Elastic strain energy $\Delta E_{el} = \frac{1}{2} F \Delta x$

Young modulus $E = \frac{\sigma}{\varepsilon}$ where

Stress $\sigma = \frac{F}{A}$

Strain $\varepsilon = \frac{\Delta x}{x}$

DO NOT WRITE IN THIS AREA
DO NOT WRITE IN THIS AREA
DO NOT WRITE IN THIS AREA
DO NOT WRITE IN THIS AREA
DO NOT WRITE IN THIS AREA
DO NOT WRITE IN THIS AREA

GradeMax

DO NOT WRITE IN THIS AREA
DO NOT WRITE IN THIS AREA
DO NOT WRITE IN THIS AREA
DO NOT WRITE IN THIS AREA
DO NOT WRITE IN THIS AREA
DO NOT WRITE IN THIS AREA

Unit 2

Waves

Wave speed	$v = f\lambda$
Speed of a transverse wave on a string	$v = \sqrt{\frac{T}{\mu}}$
Intensity of radiation	$I = \frac{P}{A}$
Refractive index	$n_1 \sin\theta_1 = n_2 \sin\theta_2$
	$n = \frac{c}{v}$
Critical angle	$\sin C = \frac{1}{n}$
Diffraction grating	$n\lambda = d\sin\theta$

Electricity

Potential difference	$V = \frac{W}{Q}$
Resistance	$R = \frac{V}{I}$
Electrical power, energy	$P = VI$
	$P = I^2R$
	$P = \frac{V^2}{R}$
	$W = VIt$
Resistivity	$R = \frac{\rho l}{A}$
Current	$I = \frac{\Delta Q}{\Delta t}$
	$I = nqvA$
Resistors in series	$R = R_1 + R_2 + R_3$
Resistors in parallel	$\frac{1}{R} = \frac{1}{R_1} + \frac{1}{R_2} + \frac{1}{R_3}$

Particle nature of light

Photon model	$E = hf$
Einstein's photoelectric equation	$hf = \phi + \frac{1}{2}mv^2_{max}$
de Broglie wavelength	$\lambda = \frac{h}{p}$

GradeMax

Unit 4

Mechanics

Impulse	$F\Delta t = \Delta p$
Kinetic energy of a non-relativistic particle	$E_k = \frac{p^2}{2m}$
motion in a circle	$v = \omega r$
	$T = \frac{2\pi}{\omega}$
	$a = \frac{v^2}{r}$
Centripetal force	$F = ma = \frac{mv^2}{r}$
	$F = m\omega^2 r$

Electric and magnetic fields

Electric field	$E = \frac{F}{Q}$
Coulomb's law	$F = \frac{Q_1 Q_2}{4\pi\varepsilon_0 r^2}$
	$E = \frac{Q}{4\pi\varepsilon_0 r^2}$
	$E = \frac{V}{d}$
Electrical Potential	$V = \frac{Q}{4\pi\varepsilon_0 r}$
Capacitance	$C = \frac{Q}{V}$
Energy stored in capacitor	$W = \frac{1}{2}QV$
	$W = \frac{1}{2}CV^2$
	$W = \frac{1}{2}\frac{Q^2}{C}$
Capacitor discharge	$Q = Q_0 e^{-t/RC}$

DO NOT WRITE IN THIS AREA DO NOT WRITE IN THIS AREA DO NOT WRITE IN THIS AREA DO NOT WRITE IN THIS AREA DO NOT WRITE IN THIS AREA DO NOT WRITE IN THIS AREA

DO NOT WRITE IN THIS AREA
DO NOT WRITE IN THIS AREA
DO NOT WRITE IN THIS AREA
DO NOT WRITE IN THIS AREA
DO NOT WRITE IN THIS AREA
DO NOT WRITE IN THIS AREA

Resistor capacitor discharge $I = I_0 e^{-t/RC}$

$$V = V_0 e^{-t/RC}$$

$$\ln Q = \ln Q_0 - \frac{t}{RC}$$

$$\ln I = \ln I_0 - \frac{t}{RC}$$

$$\ln V = \ln V_0 - \frac{t}{RC}$$

In a magnetic field $F = Bqv \sin \theta$

$$F = BIl \sin \theta$$

Faraday's and Lenz's laws $\mathscr{E} = \frac{-\mathrm{d}(N\phi)}{\mathrm{d}t}$

Nuclear and particle physics

In a magnetic field $r = \frac{p}{BQ}$

Mass-energy $\Delta E = c^2 \Delta m$

Unit 5

Thermodynamics

Heating

$$\Delta E = mc\Delta\theta$$

$$\Delta E = L\Delta m$$

Ideal gas equation

$$pV = NkT$$

Molecular kinetic theory

$$\tfrac{1}{2}m\langle c^2\rangle = \tfrac{3}{2}kT$$

Nuclear decay

Mass-energy

$$\Delta E = c^2\Delta m$$

Radio-active decay

$$A = -\lambda N$$

$$\frac{\mathrm{d}N}{\mathrm{d}t} = -\lambda N$$

$$\lambda = \frac{\ln 2}{t_{1/2}}$$

$$N = N_0 \mathrm{e}^{-\lambda t}$$

$$A = A_0 \mathrm{e}^{-\lambda t}$$

Oscillations

Simple harmonic motion

$$F = kx$$

$$a = -\omega^2 x$$

$$x = A\cos\omega t$$

$$v = -A\omega\sin\omega t$$

$$a = A\omega^2\cos\omega t$$

$$T = \frac{1}{f} = \frac{2\pi}{\omega}$$

$$\omega = 2\pi f$$

Simple harmonic oscillator

$$T = 2\pi\sqrt{\frac{m}{k}}$$

$$T = 2\pi\sqrt{\frac{l}{g}}$$

DO NOT WRITE IN THIS AREA
DO NOT WRITE IN THIS AREA
DO NOT WRITE IN THIS AREA
DO NOT WRITE IN THIS AREA
DO NOT WRITE IN THIS AREA
DO NOT WRITE IN THIS AREA

GradeMax

DO NOT WRITE IN THIS AREA
DO NOT WRITE IN THIS AREA
DO NOT WRITE IN THIS AREA
DO NOT WRITE IN THIS AREA
DO NOT WRITE IN THIS AREA
DO NOT WRITE IN THIS AREA

Astrophysics and Cosmology

Gravitational field strength	$g = F/m$
Gravitational force	$F = \frac{Gm_1m_2}{r^2}$
Gravitational field	$g = \frac{Gm}{r^2}$
Gravitational potential	$V_{grav} = \frac{-Gm}{r}$
Stephan-Boltzman law	$L = \sigma T^4 A$
Wein's law	$\lambda_{\max} T = 2.898 \times 10^{-3}\ \text{m K}$
Intensity of radiation	$I = \frac{L}{4\pi d^2}$
Redshift of electromagnetic radiation	$z = \frac{\Delta\lambda}{\lambda} \approx \frac{\Delta f}{f} \approx \frac{v}{c}$
Cosmological expansion	$v = H_0 d$

GradeMax

BLANK PAGE

DO NOT WRITE IN THIS AREA
DO NOT WRITE IN THIS AREA
DO NOT WRITE IN THIS AREA
DO NOT WRITE IN THIS AREA
DO NOT WRITE IN THIS AREA
DO NOT WRITE IN THIS AREA

GradeMax

DO NOT WRITE IN THIS AREA
DO NOT WRITE IN THIS AREA
DO NOT WRITE IN THIS AREA
DO NOT WRITE IN THIS AREA
DO NOT WRITE IN THIS AREA
DO NOT WRITE IN THIS AREA

BLANK PAGE

GradeMax

DO NOT WRITE IN THIS AREA
DO NOT WRITE IN THIS AREA
DO NOT WRITE IN THIS AREA

BLANK PAGE