GradeMax

Please check the examination details below before entering your candidate information

Candidate surname	Other names

Centre Number | Candidate Number

Pearson Edexcel International Advanced Level

Time 1 hour 30 minutes

Paper reference **WPH12/01**

Physics

International Advanced Subsidiary/Advanced Level
UNIT 2: Waves and Electricity

You must have:
Scientific calculator, ruler, protractor

Total Marks

Instructions

- Use **black** ink or ball-point pen.
- **Fill in the boxes** at the top of this page with your name, centre number and candidate number.
- Answer **all** questions.
- Answer the questions in the spaces provided – *there may be more space than you need.*
- **Show all your working out** in calculations and **include units** where appropriate.

Information

- The total mark for this paper is 80.
- The marks for **each** question are shown in brackets – *use this as a guide as to how much time to spend on each question.*
- In the question marked with an **asterisk** (*), marks will be awarded for your ability to structure your answer logically, showing how the points that you make are related or follow on from each other where appropriate.
- The list of data, formulae and relationships is printed at the end of this booklet.

Advice

- Read each question carefully before you start to answer it.
- Try to answer every question.
- Check your answers if you have time at the end.

Turn over ▶

P69435A

©2022 Pearson Education Ltd.

L:1/1/1/

P 6 9 4 3 5 A 0 1 2 8

Pearson

SECTION A

Answer ALL questions.

For questions 1–10, in Section A, select one answer from A to D and put a cross in the box ☒. If you change your mind, put a line through the box ☒ and then mark your new answer with a cross ☒.

1 Which of the following units is equivalent to the volt?

☒ **A** $\mathrm{J\,s^{-1}}$

☒ **B** $\mathrm{W\,s^{-1}}$

☒ **C** $\mathrm{J\,C^{-1}}$

☒ **D** $\mathrm{W\,C^{-1}}$

(Total for Question 1 = 1 mark)

2 The de Broglie wavelength for a moving electron is 5.47×10^{-10} m.

Which of the following expressions gives the speed of the electron in $\mathrm{m\,s^{-1}}$?

☒ **A** $\dfrac{(6.63 \times 10^{-34})}{(9.11 \times 10^{-31})(5.47 \times 10^{-10})}$

☒ **B** $\dfrac{(6.63 \times 10^{-34})}{(1.60 \times 10^{-19})(5.47 \times 10^{-10})}$

☒ **C** $\dfrac{(9.11 \times 10^{-31})(5.47 \times 10^{-10})}{(6.63 \times 10^{-34})}$

☒ **D** $\dfrac{(1.60 \times 10^{-19})(5.47 \times 10^{-10})}{(6.63 \times 10^{-34})}$

(Total for Question 2 = 1 mark)

DO NOT WRITE IN THIS AREA
DO NOT WRITE IN THIS AREA
DO NOT WRITE IN THIS AREA

DO NOT WRITE IN THIS AREA
DO NOT WRITE IN THIS AREA
DO NOT WRITE IN THIS AREA

3 The diagram shows a cell of e.m.f. ε and internal resistance r. The cell is connected in series with two resistors of resistance R_1 and R_2. The potential difference across R_1 is V_1. The current in the circuit is I.

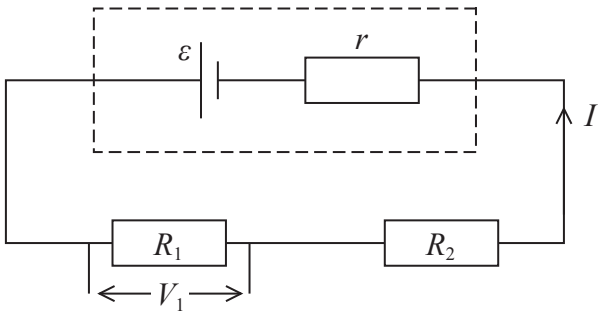

Which of the following expressions is correct?

☒ **A** $\varepsilon = V_1 + Ir$

☒ **B** $\varepsilon = IR_1 + Ir$

☒ **C** $\varepsilon = IR_2 + Ir$

☒ **D** $\varepsilon = V_1 + IR_2 + Ir$

(Total for Question 3 = 1 mark)

4 As temperature increases, the resistance of a negative temperature coefficient thermistor changes.

Which of the following describes the reason for this change?

☒ **A** Collisions between electrons and ions occur less frequently.

☒ **B** More conduction electrons are released.

☒ **C** The ions in the thermistor vibrate less.

☒ **D** The ions in the thermistor vibrate more.

(Total for Question 4 = 1 mark)

Questions 5 and 6 refer to the following information.

The diagram shows refraction of a ray of light as it passes through three transparent substances, L, M and N. The speeds of light in the three substances are v_L, v_M and v_N, respectively.

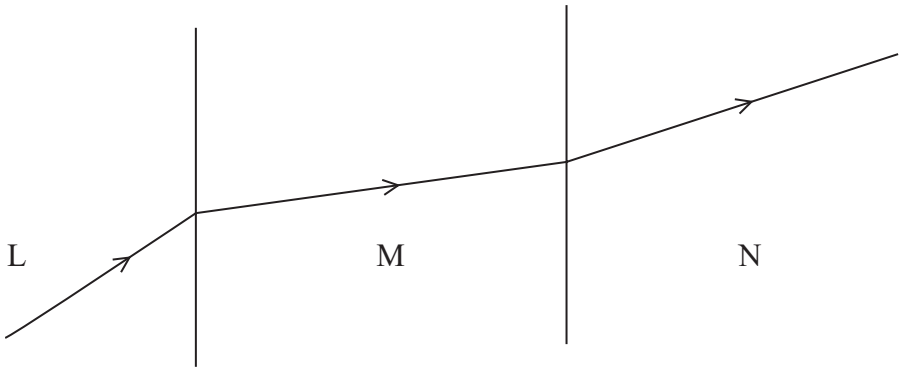

5 Which of the following shows the relationship between v_L, v_M and v_N?

☒ **A** $v_L > v_M > v_N$

☒ **B** $v_L > v_N > v_M$

☒ **C** $v_N > v_M > v_L$

☒ **D** $v_M > v_N > v_L$

(Total for Question 5 = 1 mark)

6 Which of the following could result in a ray of light undergoing total internal reflection?

☒ **A** light travelling from L to M

☒ **B** light travelling from L to N

☒ **C** light travelling from M to L

☒ **D** light travelling from N to M

(Total for Question 6 = 1 mark)

DO NOT WRITE IN THIS AREA
DO NOT WRITE IN THIS AREA
DO NOT WRITE IN THIS AREA

DO NOT WRITE IN THIS AREA
DO NOT WRITE IN THIS AREA
DO NOT WRITE IN THIS AREA

7 The diagram shows how the displacement varies with distance along a stationary wave at two instants of time.

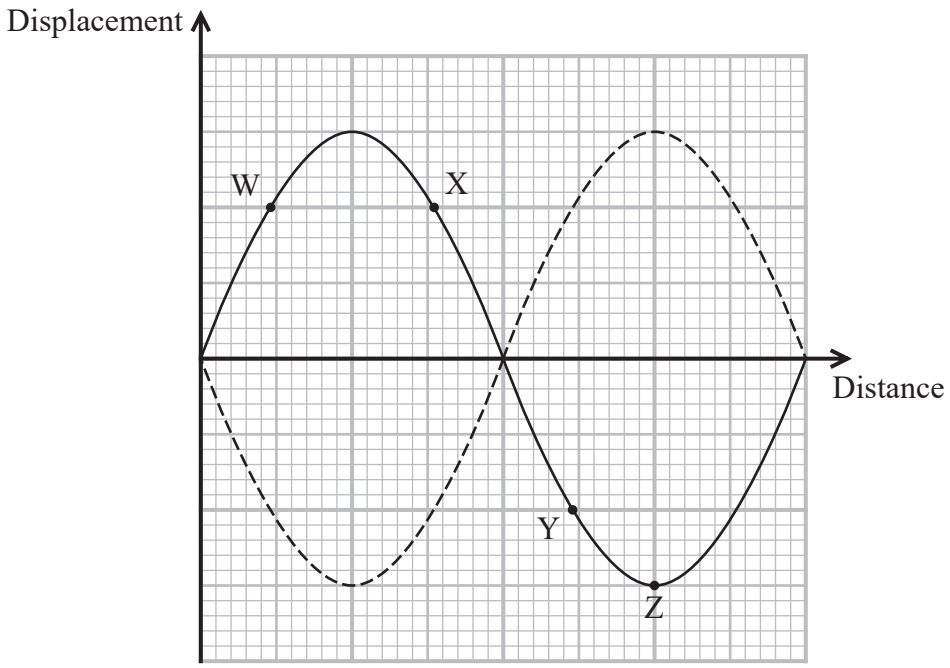

Which of the following statements is correct?

☒ **A** Points W and X are in antiphase.

☒ **B** Points W and Y are in phase.

☒ **C** Points X and Y are in phase.

☒ **D** Points X and Z are in antiphase.

(Total for Question 7 = 1 mark)

8 The graph shows how current I varies with potential difference V for an electrical component.

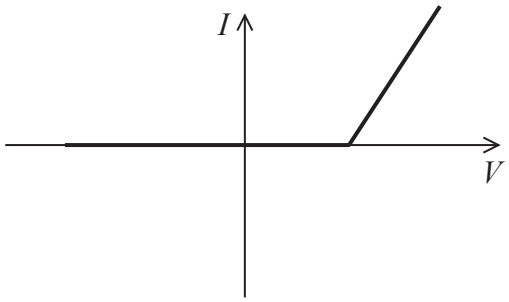

Which component is represented by this graph?

☒ **A** Diode

☒ **B** Filament lamp

☒ **C** Ohmic conductor

☒ **D** Thermistor

(Total for Question 8 = 1 mark)

9 Two waves with wavelength λ are produced by the same source. The waves travel different distances and then meet.

At the point where they meet, the path difference between the two waves is $\frac{\lambda}{8}$.

Which of the following is the phase difference, in radians, between the two waves?

☒ **A** $\frac{\pi}{2}$

☒ **B** $\frac{\pi}{4}$

☒ **C** $\frac{\pi}{8}$

☒ **D** $\frac{\pi}{16}$

(Total for Question 9 = 1 mark)

DO NOT WRITE IN THIS AREA
DO NOT WRITE IN THIS AREA
DO NOT WRITE IN THIS AREA

DO NOT WRITE IN THIS AREA
DO NOT WRITE IN THIS AREA
DO NOT WRITE IN THIS AREA

10 A light dependent resistor (LDR) and a fixed resistor are connected in a circuit, as shown.

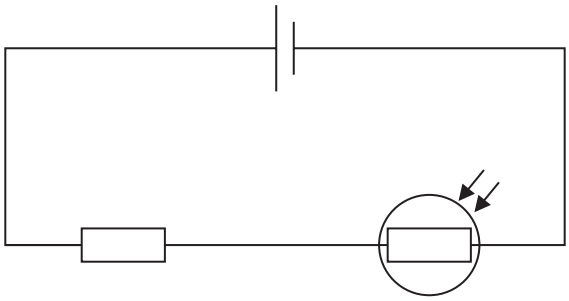

The intensity of the light incident on the LDR is increased.

Which of the following does **not** take place as the light intensity is increased?

- ☒ **A** The current in the circuit increases.
- ☒ **B** The potential difference across the fixed resistor increases.
- ☒ **C** The total power dissipated in the circuit decreases.
- ☒ **D** The resistance of the LDR decreases.

(Total for Question 10 = 1 mark)

TOTAL FOR SECTION A = 10 MARKS

SECTION B

Answer ALL questions in the spaces provided.

11 A nichrome wire of length 0.45 m has a cross-sectional area of $2.5 \times 10^{-7}\,m^2$.
The resistance of the wire is 2.0 Ω.

(a) Calculate the resistivity of nichrome.

(2)

Resistivity = ...

(b) A potential difference of 3.0 V is applied across the nichrome wire.

Calculate the drift velocity of the conduction electrons in the nichrome wire.

number of conduction electrons per $m^3 = 9.0 \times 10^{28}\,m^{-3}$

(3)

Drift velocity = ...

DO NOT WRITE IN THIS AREA
DO NOT WRITE IN THIS AREA
DO NOT WRITE IN THIS AREA

DO NOT WRITE IN THIS AREA
DO NOT WRITE IN THIS AREA
DO NOT WRITE IN THIS AREA

(c) A student suggests that the drift velocity will double if the length of wire used in the circuit is halved.

Comment on this suggestion.

(3)

.....

.....

.....

.....

.....

.....

(Total for Question 11 = 8 marks)

12 Rolled steel joists (RSJs) are used in the construction of buildings, as shown.

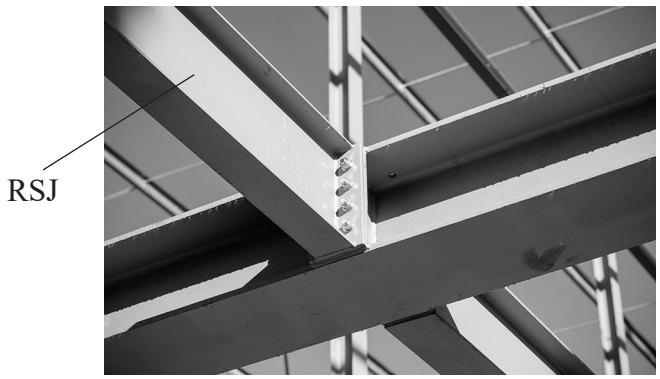

(Source: © Jon Kempner / Shutterstock)

The strength of an RSJ is greatly reduced if there are air gaps within the steel. Ultrasound is used to detect any air gaps in the RSJ.

Pulses of ultrasound are sent by a transducer into an RSJ as shown. Any returning ultrasound is detected by the transducer.

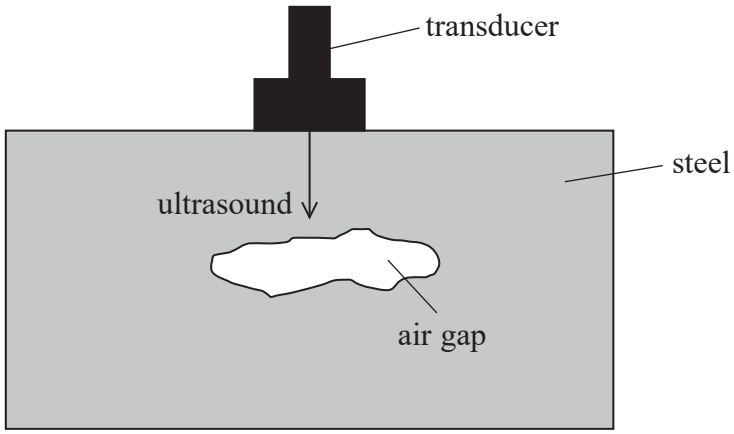

(a) Explain how this arrangement can be used to show whether the RSJ contains an air gap.

(4)

DO NOT WRITE IN THIS AREA
DO NOT WRITE IN THIS AREA
DO NOT WRITE IN THIS AREA

DO NOT WRITE IN THIS AREA
DO NOT WRITE IN THIS AREA
DO NOT WRITE IN THIS AREA

(b) Ultrasound is a sound wave with a frequency greater than 20 kHz. The frequency of ultrasound used by the transducer in this method is 5 MHz.

Explain why a much higher frequency than 20 kHz is needed in this method.

(3)

.....

.....

.....

.....

.....

.....

(Total for Question 12 = 7 marks)

BLANK PAGE

DO NOT WRITE IN THIS AREA
DO NOT WRITE IN THIS AREA
DO NOT WRITE IN THIS AREA

DO NOT WRITE IN THIS AREA
DO NOT WRITE IN THIS AREA
DO NOT WRITE IN THIS AREA

***13** In the early 20th century, observations of the photoelectric effect demonstrated that light behaves as a particle.

Explain how observations from the photoelectric effect demonstrate the particle nature of light.

(Total for Question 13 = 6 marks)

14 A laser, a diffraction grating and a screen are set up as shown. The laser emits monochromatic light.

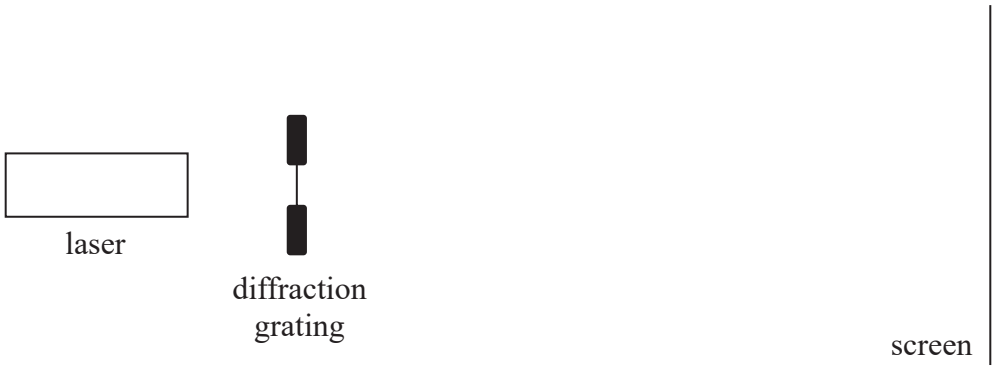

When the laser is switched on, a series of bright dots is seen on the screen.

(a) The diagram below shows the position of the central dot at O. The next bright dot appears at position X.

The diffraction grating has 450 lines per mm.

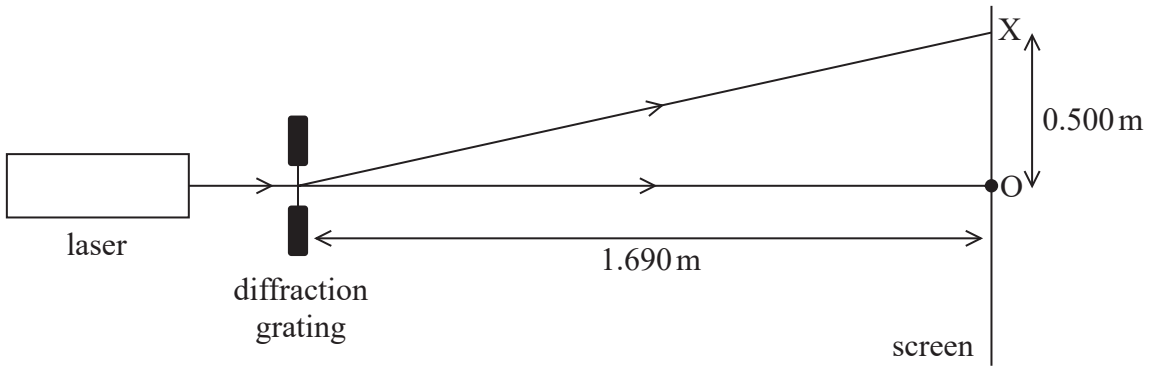

Determine the wavelength of the light from the laser.

(4)

Wavelength = ...

DO NOT WRITE IN THIS AREA
DO NOT WRITE IN THIS AREA
DO NOT WRITE IN THIS AREA

DO NOT WRITE IN THIS AREA
DO NOT WRITE IN THIS AREA
DO NOT WRITE IN THIS AREA

(b) Explain why a series of bright dots is seen on the screen.

(3)

(c) The laser is replaced by a source producing a parallel beam of bright white light.

Suggest what would now be observed on the screen.

(2)

(Total for Question 14 = 9 marks)

15 A student investigated stationary waves on a string, using the apparatus shown.

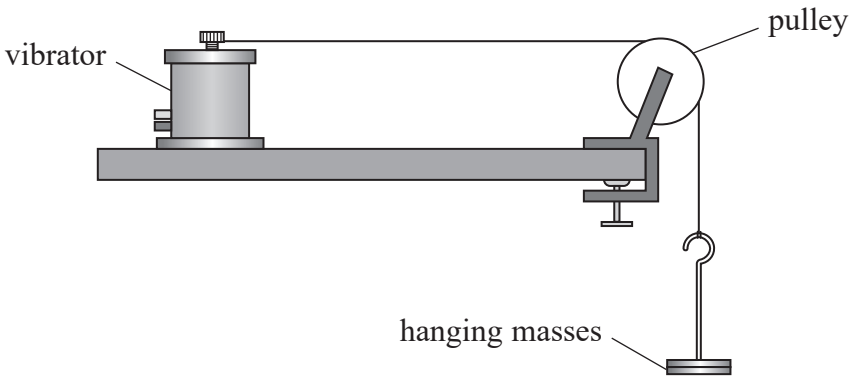

The frequency f of the vibrator was adjusted until a stationary wave was formed with a node at each end. This was repeated for various stationary waves on the string.
A metre rule was used to measure the distance d between adjacent nodes on the string.

(a) The resolution of the metre rule was 1 mm, but the measurements were recorded to the nearest 0.5 cm.

Suggest why.

(1)

.....

.....

(b) The student plotted a graph of d against $1/f$ as shown.

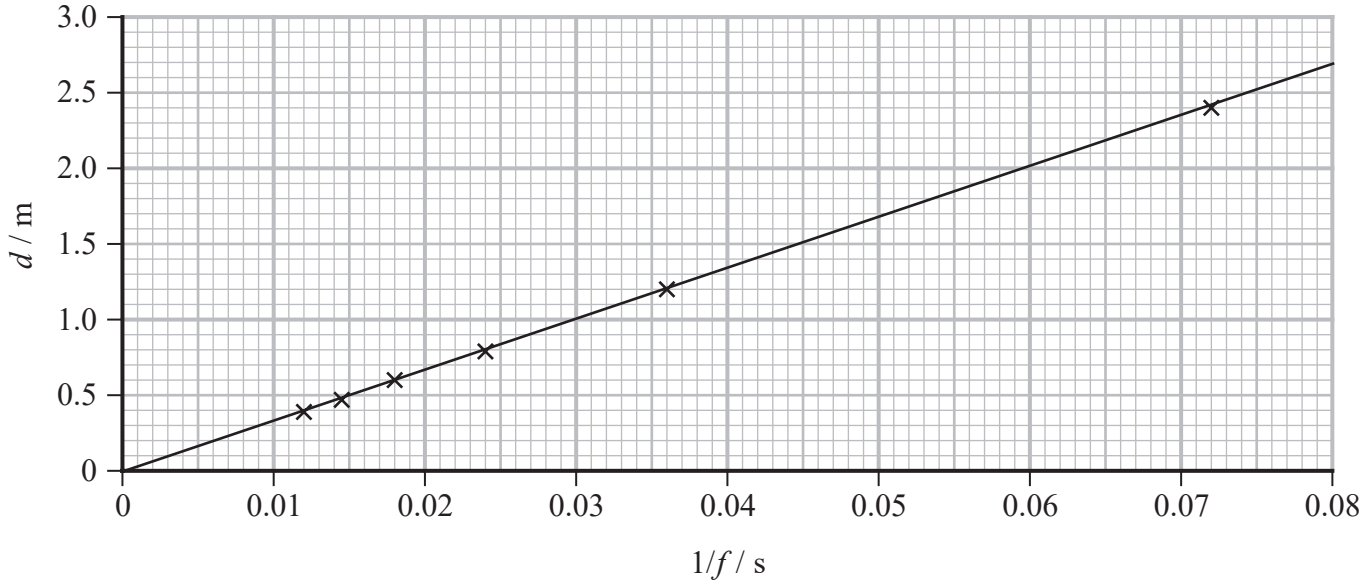

DO NOT WRITE IN THIS AREA
DO NOT WRITE IN THIS AREA
DO NOT WRITE IN THIS AREA

DO NOT WRITE IN THIS AREA
DO NOT WRITE IN THIS AREA
DO NOT WRITE IN THIS AREA

(i) Determine the total mass of the hanging masses used in the investigation.

mass per unit length of string = $4.5 \times 10^{-4}\,\text{kg m}^{-1}$

(5)

Total mass of hanging masses = ...

(ii) The string was replaced with one that had twice the mass per unit length.
The length of the string and the mass of the hanging masses did not change.

Add a line to the graph to show how d varied with $1/f$ for the new string.

(2)

(Total for Question 15 = 8 marks)

16 Light is a transverse wave.

(a) Describe the difference between transverse waves and longitudinal waves.

(2)

.....

.....

.....

.....

(b) Two prisms, A and B, made from different types of glass are placed in contact as shown. An incident ray of light enters prism A.

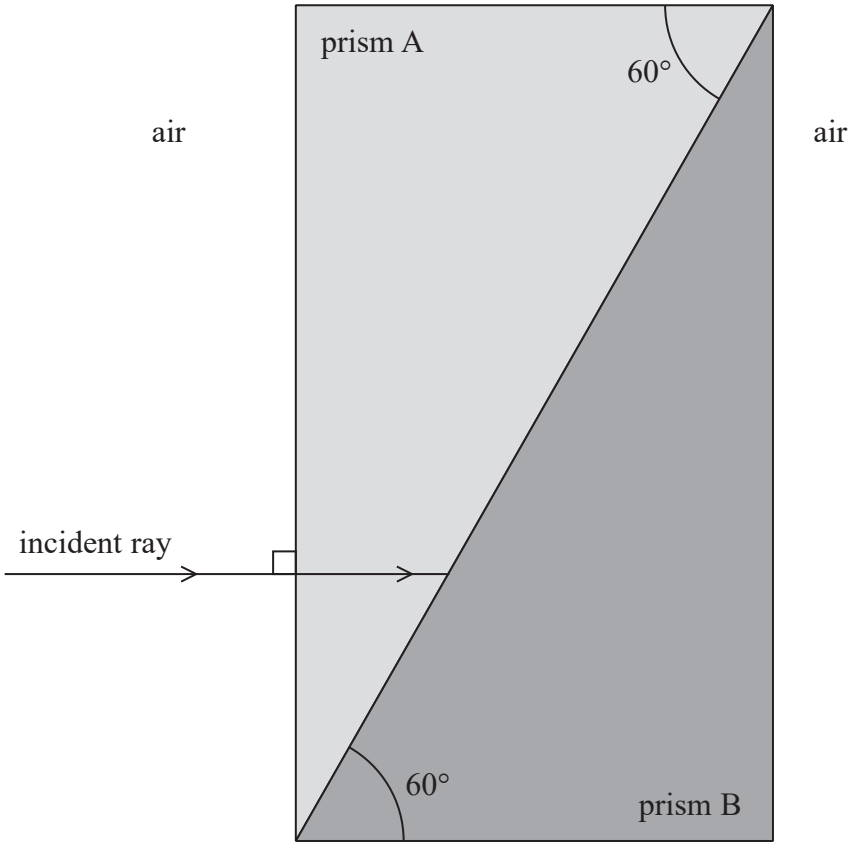

(i) State why the incident ray of light does not change direction as it enters prism A.

(1)

.....

.....

DO NOT WRITE IN THIS AREA
DO NOT WRITE IN THIS AREA
DO NOT WRITE IN THIS AREA

DO NOT WRITE IN THIS AREA
DO NOT WRITE IN THIS AREA
DO NOT WRITE IN THIS AREA

(ii) The refractive index of the glass in prism B is greater than the refractive index of the glass in prism A. When the ray of light reaches the boundary between the prisms, some light is reflected and some is refracted.

Complete the diagram to show the two paths taken by the reflected and refracted light until they have returned to the air.

(4)

(iii) Calculate the angle of refraction as this ray of light travels across the boundary between prism A and prism B.

refractive index of glass in prism A = 1.40
refractive index of glass in prism B = 1.55

(3)

Angle of refraction = ...

(c) The light emerging from prism B is observed through a polarising filter. The polarising filter is rotated gradually, and the light transmitted by the filter varies in intensity.

Explain how this observation demonstrates that light waves are transverse.

(2)

(Total for Question 16 = 12 marks)

17 A student set up the circuit shown.

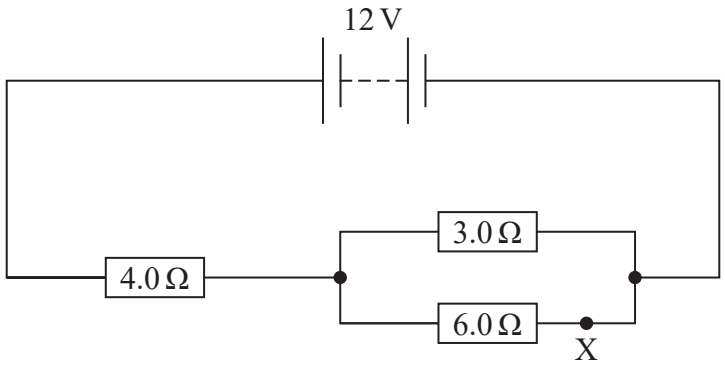

(a) Calculate the number of electrons passing point X each second.

(6)

Number of electrons in one second = ...

DO NOT WRITE IN THIS AREA
DO NOT WRITE IN THIS AREA
DO NOT WRITE IN THIS AREA

DO NOT WRITE IN THIS AREA
DO NOT WRITE IN THIS AREA
DO NOT WRITE IN THIS AREA

(b) Another resistor, Y, is added to the circuit as shown.

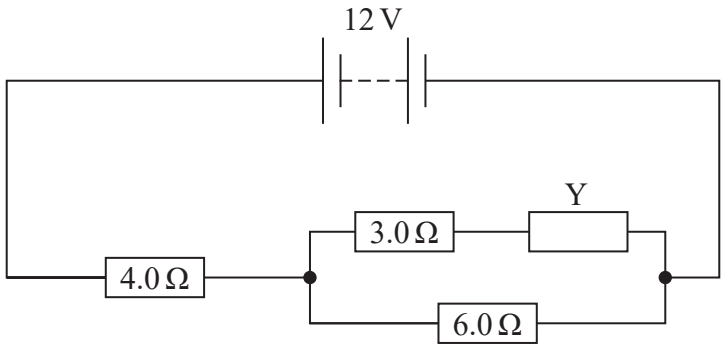

The student wrote the following statement.

When resistor Y is added, the resistance of the parallel section increases, the resistance of the whole circuit increases, and so, by $P = I^2R$, the power dissipated by the whole circuit also increases.

Evaluate the student's statement.

(4)

(Total for Question 17 = 10 marks)

18 Sirius A is the brightest star in the night sky and is mostly composed of hydrogen.

(a) When light from Sirius A passes through the hydrogen in the outer layers of the star, some light is absorbed. This causes electrons in the hydrogen to be excited. The diagram shows an electron being excited from the –3.40 eV level to the –1.50 eV level.

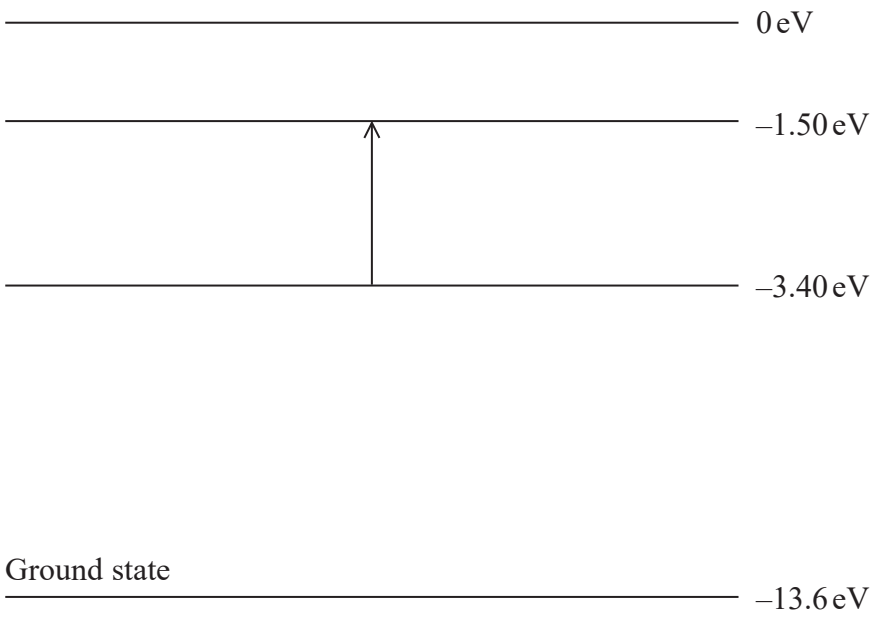

The wavelengths of the different colours of visible light are shown in the table below.

violet	blue	green	yellow	orange	red
380–450 nm	450–495 nm	495–570 nm	570–590 nm	590–620 nm	620–750 nm

Deduce the colour of the visible light that caused the electron transition shown in the diagram.

(4)

DO NOT WRITE IN THIS AREA
DO NOT WRITE IN THIS AREA
DO NOT WRITE IN THIS AREA

DO NOT WRITE IN THIS AREA
DO NOT WRITE IN THIS AREA
DO NOT WRITE IN THIS AREA

(b) A light year is the distance travelled by light in one year.

Sirius A is 8.60 light years from Earth. The intensity of radiation from Sirius A received on Earth is 1.17×10^{-7} Wm^{-2}.

Calculate the power of Sirius A.

(4)

Power of Sirius A = ...

(c) When hydrogen gas is excited in the laboratory, only certain wavelengths of light are emitted.

Explain why.

(2)

(Total for Question 18 = 10 marks)

TOTAL FOR SECTION B = 70 MARKS
TOTAL FOR PAPER = 80 MARKS

List of data, formulae and relationships

Acceleration of free fall	$g = 9.81\ \text{m s}^{-2}$	(close to Earth's surface)
Boltzmann constant	$k = 1.38 \times 10^{-23}\ \text{J K}^{-1}$	
Coulomb's law constant	$k = 1/4\pi\varepsilon_0$	
	$= 8.99 \times 10^{9}\ \text{N m}^2\ \text{C}^{-2}$	
Electron charge	$e = -1.60 \times 10^{-19}\ \text{C}$	
Electron mass	$m_e = 9.11 \times 10^{-31}\ \text{kg}$	
Electronvolt	$1\ \text{eV} = 1.60 \times 10^{-19}\ \text{J}$	
Gravitational constant	$G = 6.67 \times 10^{-11}\ \text{N m}^2\ \text{kg}^{-2}$	
Gravitational field strength	$g = 9.81\ \text{N kg}^{-1}$	(close to Earth's surface)
Permittivity of free space	$\varepsilon_0 = 8.85 \times 10^{-12}\ \text{F m}^{-1}$	
Planck constant	$h = 6.63 \times 10^{-34}\ \text{J s}$	
Proton mass	$m_p = 1.67 \times 10^{-27}\ \text{kg}$	
Speed of light in a vacuum	$c = 3.00 \times 10^{8}\ \text{m s}^{-1}$	
Stefan-Boltzmann constant	$\sigma = 5.67 \times 10^{-8}\ \text{W m}^{-2}\ \text{K}^{-4}$	
Unified atomic mass unit	$u = 1.66 \times 10^{-27}\ \text{kg}$	

Unit 1

Mechanics

Kinematic equations of motion

$$s = \frac{(u + v)t}{2}$$

$$v = u + at$$

$$s = ut + \frac{1}{2}at^2$$

$$v^2 = u^2 + 2as$$

Forces

$$\Sigma F = ma$$

$$g = \frac{F}{m}$$

$$W = mg$$

Momentum

$$p = mv$$

Moment of force

$$\text{moment} = Fx$$

Work and energy

$$\Delta W = F\Delta s$$

$$E_k = \frac{1}{2}mv^2$$

$$\Delta E_{grav} = mg\Delta h$$

Power

$$P = \frac{E}{t}$$

$$P = \frac{W}{t}$$

DO NOT WRITE IN THIS AREA
DO NOT WRITE IN THIS AREA
DO NOT WRITE IN THIS AREA

DO NOT WRITE IN THIS AREA
DO NOT WRITE IN THIS AREA
DO NOT WRITE IN THIS AREA

Efficiency

$$\text{efficiency} = \frac{\text{useful energy output}}{\text{total energy input}}$$

$$\text{efficiency} = \frac{\text{useful power output}}{\text{total power input}}$$

Materials

Density $\rho = \frac{m}{V}$

Stokes' law $F = 6\pi\eta r v$

Hooke's law $\Delta F = k\Delta x$

Elastic strain energy $\Delta E_{el} = \frac{1}{2} F \Delta x$

Young modulus $E = \frac{\sigma}{\varepsilon}$ where

Stress $\sigma = \frac{F}{A}$

Strain $\varepsilon = \frac{\Delta x}{x}$

Unit 2

Waves

Wave speed	$v = f\lambda$
Speed of a transverse wave on a string	$v = \sqrt{\frac{T}{\mu}}$
Intensity of radiation	$I = \frac{P}{A}$
Refractive index	$n_1 \sin\theta_1 = n_2 \sin\theta_2$
	$n = \frac{c}{v}$
Critical angle	$\sin C = \frac{1}{n}$
Diffraction grating	$n\lambda = d\sin\theta$

Electricity

Potential difference	$V = \frac{W}{Q}$
Resistance	$R = \frac{V}{I}$
Electrical power, energy	$P = VI$
	$P = I^2R$
	$P = \frac{V^2}{R}$
	$W = VIt$
Resistivity	$R = \frac{\rho l}{A}$
Current	$I = \frac{\Delta Q}{\Delta t}$
	$I = nqvA$
Resistors in series	$R = R_1 + R_2 + R_3$
Resistors in parallel	$\frac{1}{R} = \frac{1}{R_1} + \frac{1}{R_2} + \frac{1}{R_3}$

Particle nature of light

Photon model	$E = hf$
Einstein's photoelectric equation	$hf = \phi + \frac{1}{2}mv^2_{max}$
de Broglie wavelength	$\lambda = \frac{h}{p}$

DO NOT WRITE IN THIS AREA
DO NOT WRITE IN THIS AREA
DO NOT WRITE IN THIS AREA

DO NOT WRITE IN THIS AREA
DO NOT WRITE IN THIS AREA
DO NOT WRITE IN THIS AREA

BLANK PAGE

BLANK PAGE

DO NOT WRITE IN THIS AREA
DO NOT WRITE IN THIS AREA
DO NOT WRITE IN THIS AREA