GradeMax

Please check the examination details below before entering your candidate information

Candidate surname	Other names

Centre Number | Candidate Number

Pearson Edexcel International Advanced Level

Time 1 hour 20 minutes

Paper reference **WPH13/01**

Physics

International Advanced Subsidiary / Advanced Level
UNIT 3: Practical Skills in Physics I

You must have:
Scientific calculator, ruler

Total Marks

Instructions

- Use **black** ink or ball-point pen.
- **Fill in the boxes** at the top of this page with your name, centre number and candidate number.
- Answer **all** questions.
- Answer the questions in the spaces provided – *there may be more space than you need.*
- **Show all your working out** in calculations and **include units** where appropriate.

Information

- The total mark for this paper is 50.
- The marks for **each** question are shown in brackets – *use this as a guide as to how much time to spend on each question.*
- The list of data, formulae and relationships is printed at the end of this booklet.

Advice

- Read each question carefully before you start to answer it.
- Try to answer every question.
- Check your answers if you have time at the end.

Turn over ▶

P70970A

©2022 Pearson Education Ltd.

Q:1/1/1

P 7 0 9 7 0 A 0 1 2 0

Pearson

Answer ALL questions.

1 A student investigated the acceleration of a trolley as it rolled down a ramp. The trolley was released from rest at the top of the ramp and allowed to roll onto a horizontal surface. There was a single light gate above the horizontal surface, as shown.

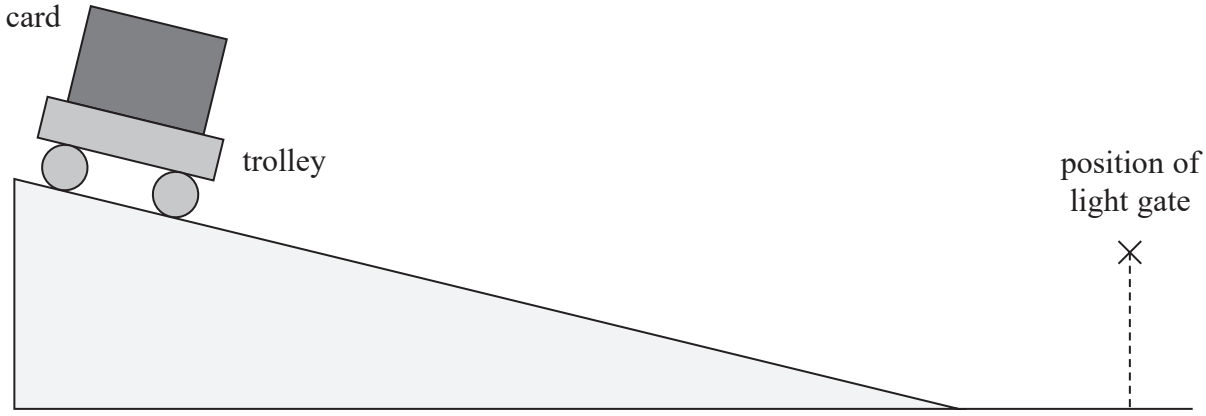

(a) The light gate was connected to a data logger. The data logger recorded the time taken for the card to pass through the light gate.

Describe how the student could determine the velocity v of the trolley as it passed through the light gate.

(2)

DO NOT WRITE IN THIS AREA
DO NOT WRITE IN THIS AREA
DO NOT WRITE IN THIS AREA

DO NOT WRITE IN THIS AREA
DO NOT WRITE IN THIS AREA
DO NOT WRITE IN THIS AREA

(b) The student repeated the procedure and determined four values of v. The values are shown in the table.

v / m s^{-1}			
2.07	1.84	1.91	2.10

(i) Calculate the mean value for v and the percentage uncertainty in v.

(3)

Mean v = ... m s^{-1}

Percentage uncertainty in v = ... %

(ii) The student measured the distance s that the trolley travelled on the ramp.

Determine the acceleration of the trolley on the ramp.

s = 1.50 m

(2)

Acceleration = ... m s^{-2}

(iii) A second student carried out the same experiment and determined a similar value for the acceleration of the trolley on the ramp.

State why this does **not** show that the results are reproducible.

(1)

(Total for Question 1 = 8 marks)

2 A student varied the power of a filament bulb to investigate the light emitted by the bulb.

(a) The student built a circuit to vary the power of the bulb. The student used an ammeter and voltmeter to determine the power of the bulb.

Draw a circuit diagram that the student could have used.

(2)

(b) The student shone the light from the bulb onto a light dependent resistor (LDR). The student measured the resistance of the LDR using an ohmmeter.

The student plotted a graph of the resistance of the LDR against the power of the bulb.

Describe how the student could have obtained the set of data required to plot the graph. Your description should include how to ensure that the data is accurate.

(4)

DO NOT WRITE IN THIS AREA
DO NOT WRITE IN THIS AREA
DO NOT WRITE IN THIS AREA

DO NOT WRITE IN THIS AREA
DO NOT WRITE IN THIS AREA
DO NOT WRITE IN THIS AREA

(c) The LDR is connected to the ohmmeter using two connecting wires. The ohmmeter reading includes the resistance of the two connecting wires.

State why the student does not need to correct this reading.

(1)

.....

.....

(Total for Question 2 = 7 marks)

3 A student investigated the forces acting on a bracket.

The bracket of weight W was attached to a vertical wall with a hinge at point C. The bracket was held horizontally by a wire attached to the bracket at point A and to the wall at point B. The wire was at an angle θ to the bracket and exerted a force F on the bracket.

The student hung a mass from the bracket at a distance x from the hinge, as shown.

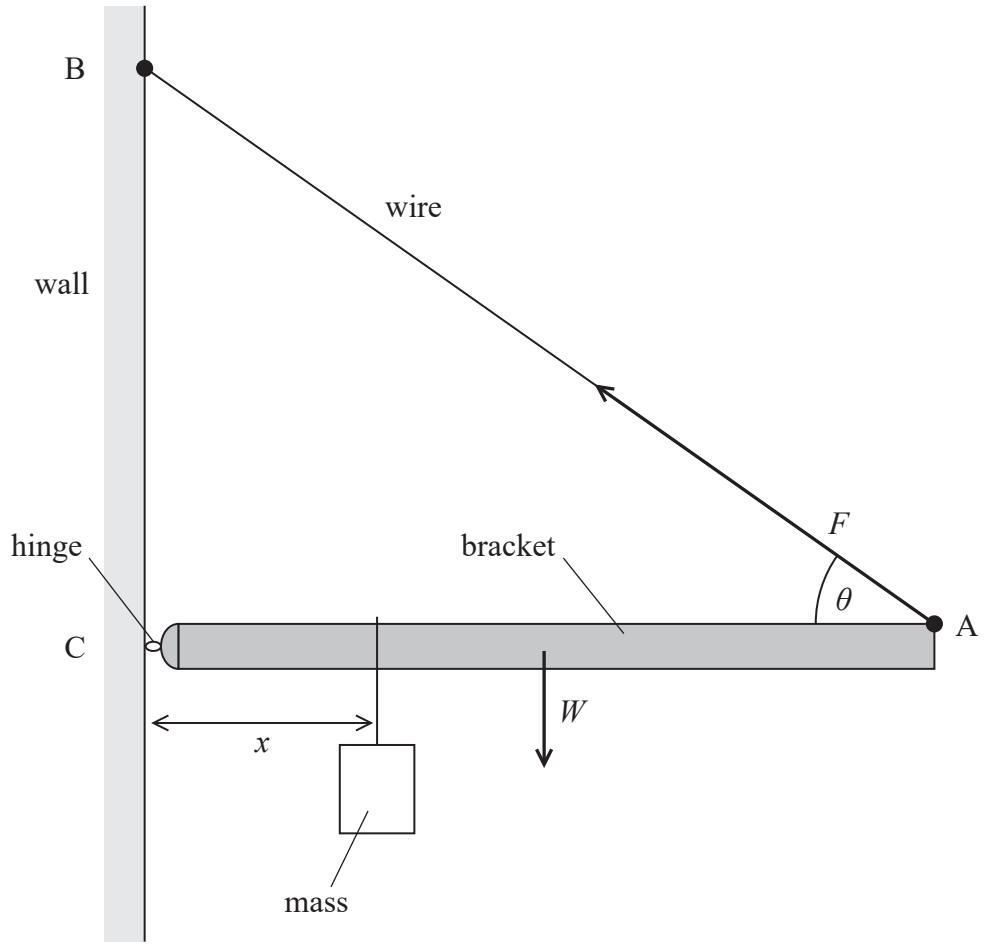

(a) Describe how the student could determine θ using a metre rule.

(2)

DO NOT WRITE IN THIS AREA
DO NOT WRITE IN THIS AREA
DO NOT WRITE IN THIS AREA

DO NOT WRITE IN THIS AREA
DO NOT WRITE IN THIS AREA
DO NOT WRITE IN THIS AREA

(b) Describe how the student could check that the bracket was horizontal.

(1)

.....

.....

.....

(c) The student adjusted the position of the mass and measured x. For each value of x the student made corresponding measurements of F using a force meter.
The results are shown in the table.

x/cm	Mean F/N
5	2
10	2.6
15	3.3
20	4.4
25	5.3
30	6.2
35	7
40	8.1
45	8.8

Criticise the recording of these results.

(3)

.....

.....

.....

.....

(d) The student plotted a graph of F against x, as shown.

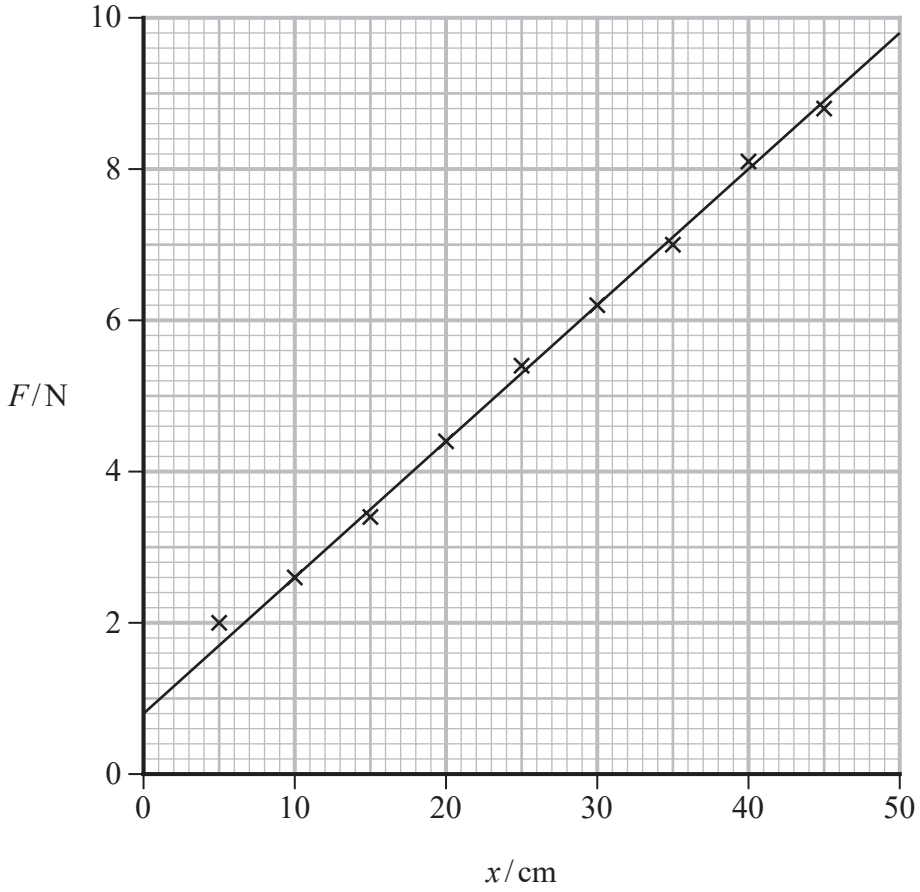

(i) The relationship between F and x is

$$F = \frac{mgx}{l\sin\theta} + \frac{W}{2\sin\theta}$$

where

l is the length of the bracket
m is the mass hung from the bracket.

Determine a value for W using the graph.

$\theta = 42°$

(3)

$W =$ ..... N

DO NOT WRITE IN THIS AREA
DO NOT WRITE IN THIS AREA
DO NOT WRITE IN THIS AREA

DO NOT WRITE IN THIS AREA
DO NOT WRITE IN THIS AREA
DO NOT WRITE IN THIS AREA

(ii) The value of g obtained from the graph is $9.64\,m\,s^{-2}$.

The student concluded that the value of g obtained is accurate.

Evaluate the student's conclusion.

(2)

.....

.....

.....

.....

(Total for Question 3 = 11 marks)

4 A student investigated the resistance of some thin slices of silicon.

Each silicon slice had
- the same length L
- the same thickness t
- a different width w

Conducting strips were fitted to opposite ends of each silicon slice and connected to an ohmmeter, as shown.

The student measured values of w and corresponding values of resistance R.

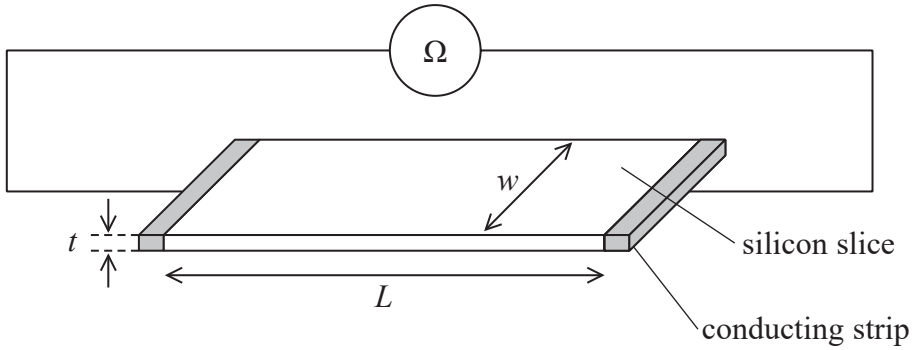

(a) The table shows the student's measurements.

w / mm	R / MΩ	
14	33.6	
18	26.1	
26	17.2	
37	13.3	
53	8.7	

The relationship between R and w is

$$R = \frac{\rho L}{wt}$$

where ρ is the resistivity of silicon.

(i) Plot a graph of R on the y-axis against $1/w$ on the x-axis. Use the additional column of the table for your processed data.

(6)

DO NOT WRITE IN THIS AREA
DO NOT WRITE IN THIS AREA
DO NOT WRITE IN THIS AREA

DO NOT WRITE IN THIS AREA
DO NOT WRITE IN THIS AREA
DO NOT WRITE IN THIS AREA

(ii) Determine t using data from the graph.

$\rho = 4.0 \times 10^3\ \Omega\,m$
$L = 10.0\,cm$

(3)

(b) The student determined a value for t. She decided to measure the thickness of several silicon slices stacked together. She measured this thickness using a micrometer.

(i) Explain why this method gives a value for t with low uncertainty.

(2)

(ii) The value of t obtained using this method was 0.80 mm with an uncertainty of 2%.

Deduce whether this value is consistent with the value of t obtained from the graph.

(2)

(Total for Question 4 = 13 marks)

DO NOT WRITE IN THIS AREA
DO NOT WRITE IN THIS AREA
DO NOT WRITE IN THIS AREA

DO NOT WRITE IN THIS AREA
DO NOT WRITE IN THIS AREA
DO NOT WRITE IN THIS AREA

5 A student carried out an experiment to compare the speed of sound in air and the speed of sound in wood. The student used a long piece of wood, a hammer and two microphones, as shown.

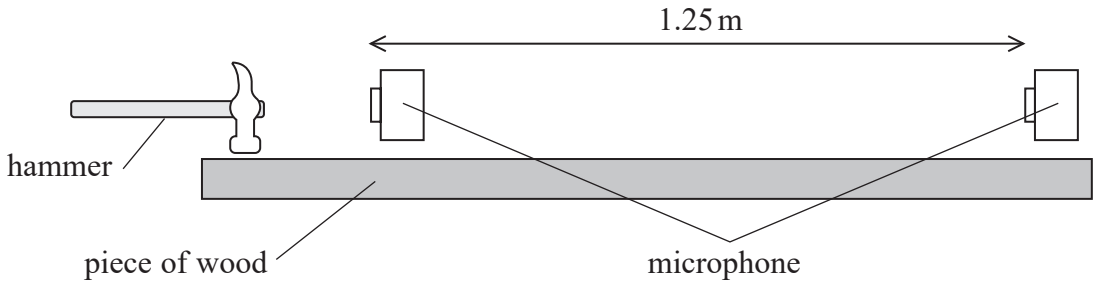

The microphones were connected to a 2-beam oscilloscope. The student hit the wood with a metal hammer producing a sharp sound that travelled through the air. The oscilloscope traces produced by the microphones and the time per division dial are shown.

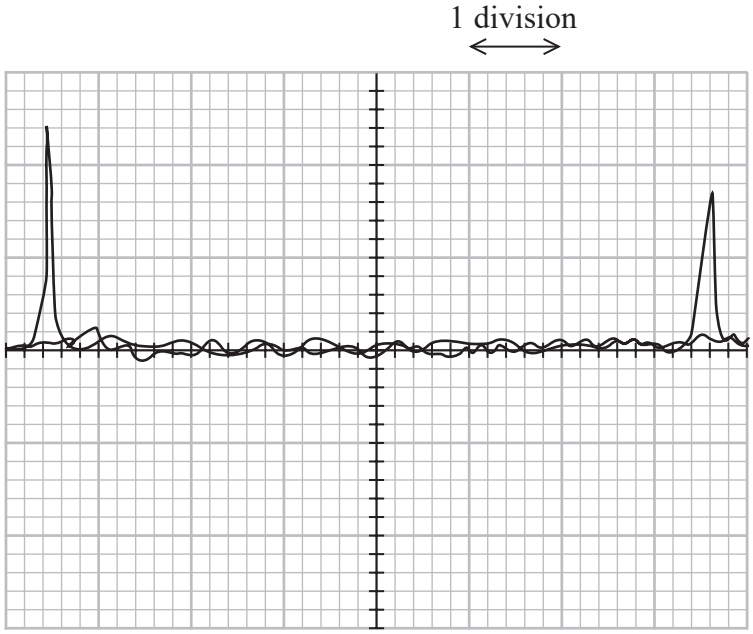

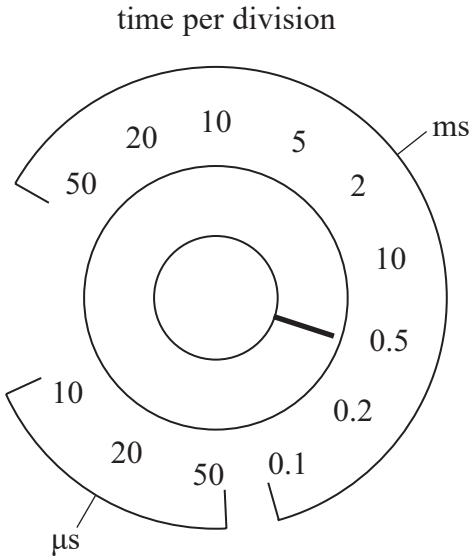

(a) (i) Determine the speed of sound in air.

distance between microphones = 1.25 m

(4)

Speed of sound = ... $m\,s^{-1}$

(ii) The student then attached the microphones to the piece of wood so they detected the sound passing along the wood. The distance between the microphones was 1.25 m.

The student adjusted the dial on the oscilloscope to 20 µs per division to display the traces from the microphones. A teacher commented that this was not the correct setting.

Justify the teacher's comment.

The piece of wood is made of oak. The speed of sound in oak is approximately 4000 $m\,s^{-1}$.

(3)

DO NOT WRITE IN THIS AREA
DO NOT WRITE IN THIS AREA
DO NOT WRITE IN THIS AREA

DO NOT WRITE IN THIS AREA
DO NOT WRITE IN THIS AREA
DO NOT WRITE IN THIS AREA

(b) The student tried the same experiment using a rubber hammer. The rubber hammer compressed as it hit the wood making a sound that lasted for a longer time.

Explain the effect that using the rubber hammer had on the accuracy of the time determined.

(2)

.....

.....

.....

.....

(c) The student was given the following equation and data to find a value for the speed of sound in oak.

$$v = \sqrt{\frac{E}{\rho}}$$

Young modulus E of oak = 11.2 GPa ± 0.5 GPa
Density ρ of oak = 650 kg m^{-3} with an uncertainty of 3%

Assess which of these values was the more significant source of uncertainty in the value of the speed of sound.

(2)

.....

.....

.....

.....

(Total for Question 5 = 11 marks)

TOTAL FOR PAPER = 50 MARKS

List of data, formulae and relationships

Acceleration of free fall	$g = 9.81$ m s^{-2}	(close to Earth's surface)
Electron charge	$e = -1.60 \times 10^{-19}$ C	
Electron mass	$m_e = 9.11 \times 10^{-31}$ kg	
Electronvolt	$1\,\text{eV} = 1.60 \times 10^{-19}$ J	
Gravitational field strength	$g = 9.81$ N kg^{-1}	(close to Earth's surface)
Planck constant	$h = 6.63 \times 10^{-34}$ J s	
Speed of light in a vacuum	$c = 3.00 \times 10^{8}$ m s^{-1}	

Unit 1

Mechanics

Kinematic equations of motion

$$s = \frac{(u + v)t}{2}$$

$$v = u + at$$

$$s = ut + \frac{1}{2}at^2$$

$$v^2 = u^2 + 2as$$

Forces

$$\Sigma F = ma$$

$$g = \frac{F}{m}$$

$$W = mg$$

Momentum

$$p = mv$$

Moment of force

$$\text{moment} = Fx$$

Work and energy

$$\Delta W = F\Delta s$$

$$E_k = \frac{1}{2}mv^2$$

$$\Delta E_{grav} = mg\Delta h$$

Power

$$P = \frac{E}{t}$$

$$P = \frac{W}{t}$$

DO NOT WRITE IN THIS AREA
DO NOT WRITE IN THIS AREA
DO NOT WRITE IN THIS AREA

DO NOT WRITE IN THIS AREA
DO NOT WRITE IN THIS AREA
DO NOT WRITE IN THIS AREA

Efficiency

$$\text{efficiency} = \frac{\text{useful energy output}}{\text{total energy input}}$$

$$\text{efficiency} = \frac{\text{useful power output}}{\text{total power input}}$$

Materials

Density $\rho = \frac{m}{V}$

Stokes' law $F = 6\pi\eta r v$

Hooke's law $\Delta F = k\Delta x$

Elastic strain energy $\Delta E_{el} = \frac{1}{2} F \Delta x$

Young modulus $E = \frac{\sigma}{\varepsilon}$ where

Stress $\sigma = \frac{F}{A}$

Strain $\varepsilon = \frac{\Delta x}{x}$

Unit 2

Waves

Wave speed	$v = f\lambda$
Speed of a transverse wave on a string	$v = \sqrt{\frac{T}{\mu}}$
Intensity of radiation	$I = \frac{P}{A}$
Refractive index	$n_1 \sin\theta_1 = n_2 \sin\theta_2$
	$n = \frac{c}{v}$
Critical angle	$\sin C = \frac{1}{n}$
Diffraction grating	$n\lambda = d\sin\theta$

Electricity

Potential difference	$V = \frac{W}{Q}$
Resistance	$R = \frac{V}{I}$
Electrical power, energy	$P = VI$
	$P = I^2R$
	$P = \frac{V^2}{R}$
	$W = VIt$
Resistivity	$R = \frac{\rho l}{A}$
Current	$I = \frac{\Delta Q}{\Delta t}$
	$I = nqvA$
Resistors in series	$R = R_1 + R_2 + R_3$
Resistors in parallel	$\frac{1}{R} = \frac{1}{R_1} + \frac{1}{R_2} + \frac{1}{R_3}$

Particle nature of light

Photon model	$E = hf$
Einstein's photoelectric equation	$hf = \phi + \frac{1}{2}mv^2_{\max}$
de Broglie wavelength	$\lambda = \frac{h}{p}$

DO NOT WRITE IN THIS AREA
DO NOT WRITE IN THIS AREA
DO NOT WRITE IN THIS AREA

DO NOT WRITE IN THIS AREA
DO NOT WRITE IN THIS AREA
DO NOT WRITE IN THIS AREA

BLANK PAGE

BLANK PAGE

DO NOT WRITE IN THIS AREA
DO NOT WRITE IN THIS AREA
DO NOT WRITE IN THIS AREA