Please check the examination details below before entering your candidate information

Candidate surname	Other names

Centre Number | Candidate Number

Pearson Edexcel International Advanced Level

Wednesday 14 May 2025

Morning (Time: 1 hour 30 minutes)

Paper reference **WPH12/01**

Physics

International Advanced Subsidiary/Advanced Level
UNIT 2: Waves and Electricity

You must have:
Scientific calculator, ruler, protractor

Total Marks

Instructions

- Use **black** ink or ball-point pen.
- If pencil is used for diagrams/sketches/graphs it must be dark (HB or B).
- **Fill in the boxes** at the top of this page with your name, centre number and candidate number.
- Answer **all** questions.
- Answer the questions in the spaces provided – *there may be more space than you need.*
- **Show all your working out** in calculations and **include units** where appropriate.

Information

- The total mark for this paper is 80.
- The marks for **each** question are shown in brackets – *use this as a guide as to how much time to spend on each question.*
- In the question marked with an **asterisk (*)**, marks will be awarded for your ability to structure your answer logically, showing how the points that you make are related or follow on from each other where appropriate.
- The list of data, formulae and relationships is printed at the end of this booklet.

Advice

- Read each question carefully before you start to answer it.
- Try to answer every question.
- Check your answers if you have time at the end.

Turn over ▶

P78754A

©2025 Pearson Education Ltd.
Y:1/1/1/

P 7 8 7 5 4 A 0 1 2 8

Pearson

SECTION A

Answer ALL questions.

For questions 1–10, in Section A, select one answer from A to D and put a cross in the box ☒. If you change your mind, put a line through the box ☒ and then mark your new answer with a cross ☒.

1 The refractive index of vegetable oil is 1.47

Which of the following is the speed of light, in $m\,s^{-1}$, in vegetable oil?

☒ **A** 1.59×10^8

☒ **B** 2.04×10^8

☒ **C** 3.00×10^8

☒ **D** 4.41×10^8

(Total for Question 1 = 1 mark)

2 A ray of light is incident on the boundary between Perspex and air, as shown.

The angle of incidence *i* is greater than the critical angle for the Perspex-air boundary.

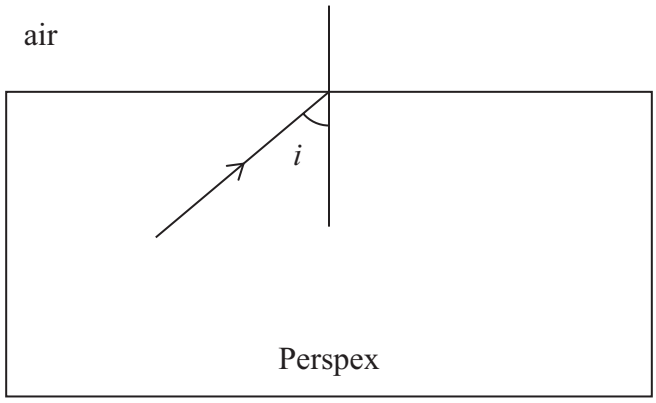

Which of the following statements is correct for the Perspex-air boundary?

☒ **A** All the light is refracted.

☒ **B** All the light is transmitted.

☒ **C** All the light is reflected.

☒ **D** Some light is reflected and some light is refracted.

(Total for Question 2 = 1 mark)

DO NOT WRITE IN THIS AREA
DO NOT WRITE IN THIS AREA
DO NOT WRITE IN THIS AREA

DO NOT WRITE IN THIS AREA
DO NOT WRITE IN THIS AREA
DO NOT WRITE IN THIS AREA

3 Which of the following units is equivalent to the coulomb?

- ☒ **A** As^{-1}
- ☒ **B** JV^{-1}
- ☒ **C** WA^{-1}
- ☒ **D** WV^{-1}

(Total for Question 3 = 1 mark)

4 A student sets up the apparatus shown.

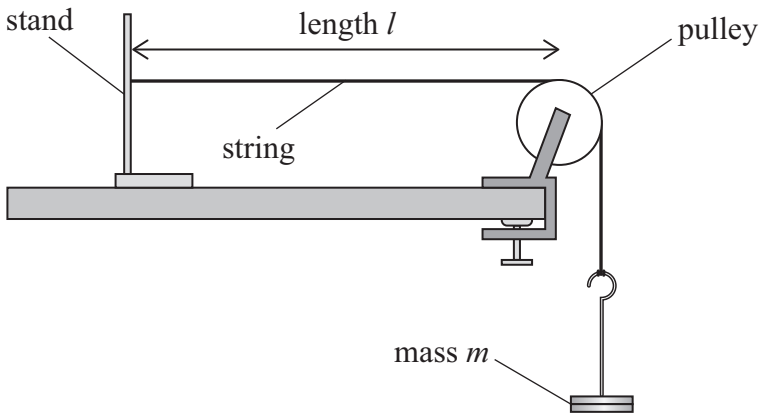

When the string is plucked, it vibrates with a frequency *f*.

Which of the following single changes would increase *f*?

- ☒ **A** decreasing the length *l*
- ☒ **B** decreasing the mass *m*
- ☒ **C** increasing the cross-sectional area of the string
- ☒ **D** increasing the mass per unit length of the string

(Total for Question 4 = 1 mark)

5 An energy level diagram for the hydrogen atom is shown.
Arrows A, B, C and D show four possible electron transitions.

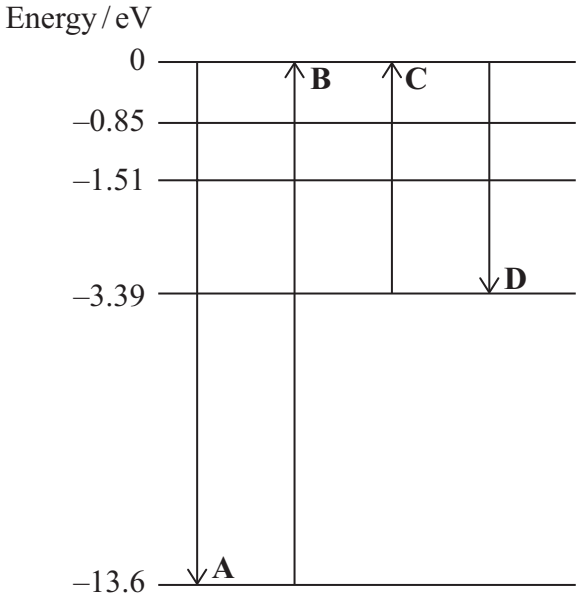

Which transition would result in the emission of a photon with the shortest wavelength?

☒ **A**

☒ **B**

☒ **C**

☒ **D**

(Total for Question 5 = 1 mark)

DO NOT WRITE IN THIS AREA
DO NOT WRITE IN THIS AREA
DO NOT WRITE IN THIS AREA

DO NOT WRITE IN THIS AREA
DO NOT WRITE IN THIS AREA
DO NOT WRITE IN THIS AREA

6 A negative temperature coefficient thermistor is connected in a circuit, as shown.

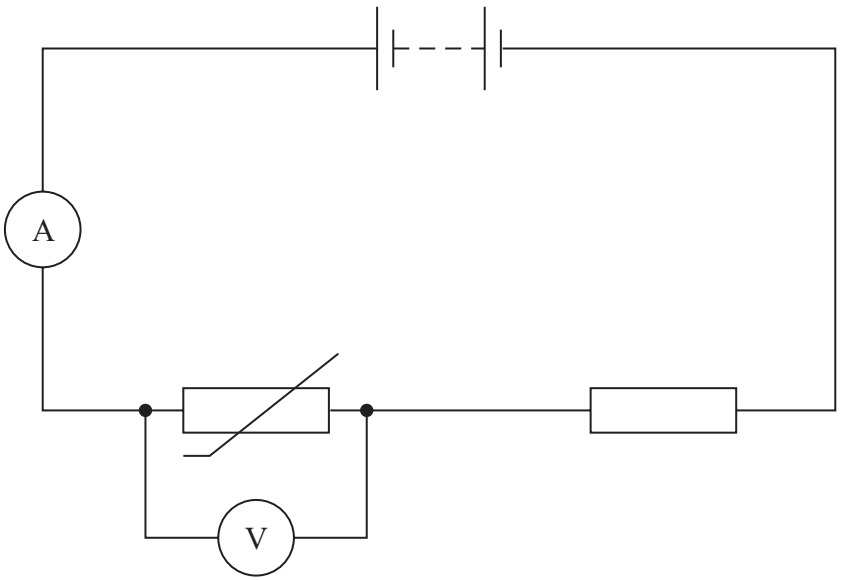

The temperature of the thermistor is increased.

Which row of the table gives the changes to the readings on the ammeter and the voltmeter?

	Ammeter	Voltmeter
☒ **A**	decreases	increases
☒ **B**	decreases	decreases
☒ **C**	increases	increases
☒ **D**	increases	decreases

(Total for Question 6 = 1 mark)

7 Two waves, of wavelength 2 m, are produced by a source at point X, as shown.
Both waves are initially in phase.

The waves travel different distances and meet at point Y.

Not to scale

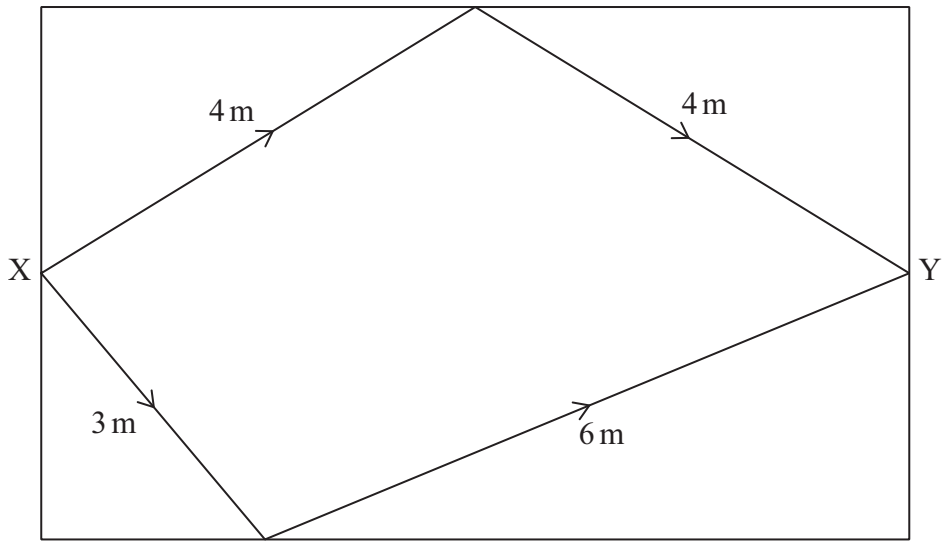

Which of the following is the phase difference, in radians, between the two waves at point Y?

☒ **A** 0

☒ **B** $\frac{\pi}{4}$

☒ **C** $\frac{\pi}{2}$

☒ **D** π

(Total for Question 7 = 1 mark)

8 The cell in a solar-powered lamp stores 6.0 kJ of energy.
The lamp is switched on and the cell discharges fully.
The cell has a constant e.m.f. of 1.5 V.

Which of the following is the charge that passes through the lamp?

☒ **A** 0.25 C

☒ **B** 4.0 C

☒ **C** 4000 C

☒ **D** 9000 C

(Total for Question 8 = 1 mark)

DO NOT WRITE IN THIS AREA
DO NOT WRITE IN THIS AREA
DO NOT WRITE IN THIS AREA

DO NOT WRITE IN THIS AREA
DO NOT WRITE IN THIS AREA
DO NOT WRITE IN THIS AREA

9 When monochromatic light is incident on the surface of a metal, photoelectrons are emitted.

Which of the following statements is correct?

- ☒ **A** The maximum kinetic energy of the photoelectrons depends on the intensity of the incident light.
- ☒ **B** The number of photoelectrons emitted per second depends on the frequency of the incident light.
- ☒ **C** The maximum kinetic energy of the photoelectrons depends on the frequency of the incident light.
- ☒ **D** The number of photoelectrons emitted per second depends on the work function of the metal.

(Total for Question 9 = 1 mark)

10 Two wires, X and Y, are made of the same material. The wires are connected in series. The current in the wires is I, as shown.

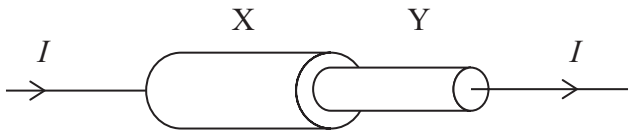

Wire X has twice the diameter of wire Y.

The mean drift velocity of electrons in wire X is v.

Which of the following is the mean drift velocity of electrons in wire Y?

- ☒ **A** $0.25v$
- ☒ **B** $0.5v$
- ☒ **C** $2v$
- ☒ **D** $4v$

(Total for Question 10 = 1 mark)

TOTAL FOR SECTION A = 10 MARKS

GradeMax

BLANK PAGE

DO NOT WRITE IN THIS AREA
DO NOT WRITE IN THIS AREA
DO NOT WRITE IN THIS AREA

DO NOT WRITE IN THIS AREA
DO NOT WRITE IN THIS AREA
DO NOT WRITE IN THIS AREA

SECTION B

Answer ALL questions in the spaces provided.

11 A wire has a resistance of 65 mΩ. The length of the wire is 0.25 m.

The wire has a circular cross-sectional area.

Calculate the diameter of the wire.

resistivity of the metal of the wire = 5.6×10^{-8} Ωm

.....

.....

.....

.....

.....

.....

Diameter = ...

(Total for Question 11 = 3 marks)

12 A student uses a ray box to direct a narrow ray of light onto the surface of a glass block, as shown.

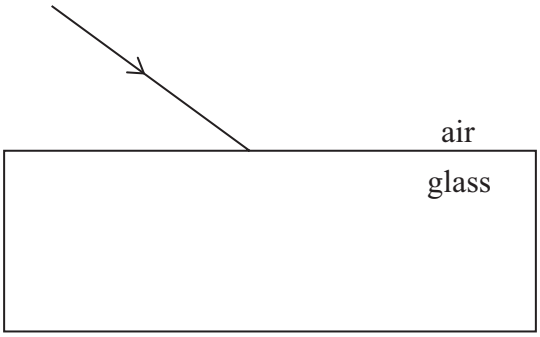

(a) (i) Determine the angle of incidence.

(1)

Angle of incidence = ...

(ii) Calculate the angle of refraction in the glass block.

refractive index of glass block = 1.5

(2)

.....

.....

.....

Angle of refraction = ...

DO NOT WRITE IN THIS AREA
DO NOT WRITE IN THIS AREA
DO NOT WRITE IN THIS AREA

DO NOT WRITE IN THIS AREA
DO NOT WRITE IN THIS AREA
DO NOT WRITE IN THIS AREA

(b) The light from the ray box is unpolarised. When reflected by glass, some of this light will become polarised.

(i) Explain the difference between unpolarised light and polarised light.

(3)

(ii) The student uses a polarising filter to view the light reflected by the glass block.

Explain what she would observe as she rotates the filter.

(3)

(Total for Question 12 = 9 marks)

13 Concrete is often used in building construction.

After several years, concrete may develop cracks. Ultrasound can be used to find these cracks.

A transducer sends pulses of ultrasound into a piece of concrete, as shown.

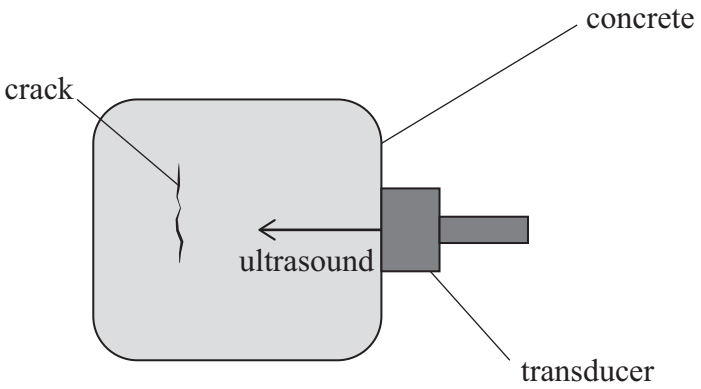

The transducer detects pulses of ultrasound reflected from the crack.

To be detected, the reflected pulse must not overlap with the pulse emitted by the transducer.

(a) In this piece of concrete, the speed v of ultrasound varies with temperature, as shown.

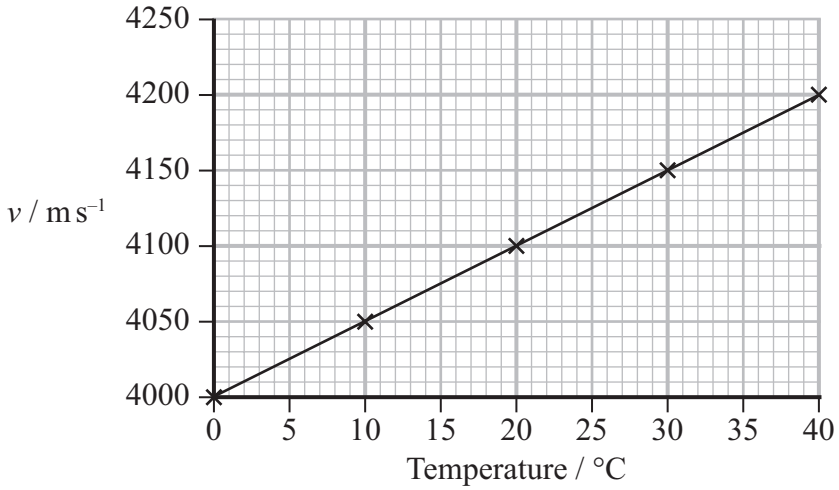

DO NOT WRITE IN THIS AREA
DO NOT WRITE IN THIS AREA
DO NOT WRITE IN THIS AREA

DO NOT WRITE IN THIS AREA
DO NOT WRITE IN THIS AREA
DO NOT WRITE IN THIS AREA

A pulse of ultrasound is incident on a crack in this piece of concrete. The crack is a distance of 4.0 cm from the transducer.

The temperature of the concrete is 23 °C.

Deduce whether the transducer can detect ultrasound reflected from this crack.

duration of ultrasound pulse = 200 μs

(4)

(b) Pulses of ultrasound with a higher frequency can be used to find cracks of shorter length.

Explain why a higher frequency is used.

(2)

(Total for Question 13 = 6 marks)

14 The photograph shows an electric bicycle.



(Source: © stockphoto-graf/Alamy Stock Photo)

The battery contains several identical cells connected in series. Each cell has an e.m.f. of 1.5 V.

(a) One cell is removed from the battery and connected in the circuit shown.

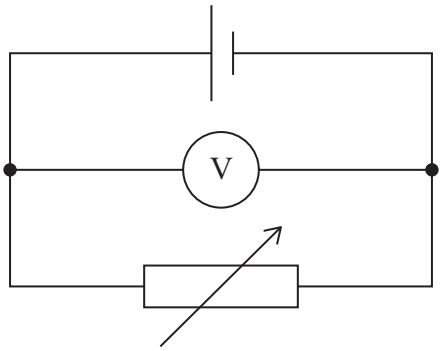

When the resistance of the variable resistor is 10 Ω, the reading on the voltmeter is 1.4 V.

Calculate the internal resistance of the cell.

(3)

Internal resistance = ...

DO NOT WRITE IN THIS AREA
DO NOT WRITE IN THIS AREA
DO NOT WRITE IN THIS AREA

DO NOT WRITE IN THIS AREA
DO NOT WRITE IN THIS AREA
DO NOT WRITE IN THIS AREA

(b) The battery in an electric bicycle gets warm when the battery supplies power to the motor in the bicycle.

Explain why the battery gets hot when the bicycle is going up a steep hill.

(4)

(Total for Question 14 = 7 marks)

15 The diagram shows apparatus used to demonstrate the diffraction of an electron beam in a school laboratory.

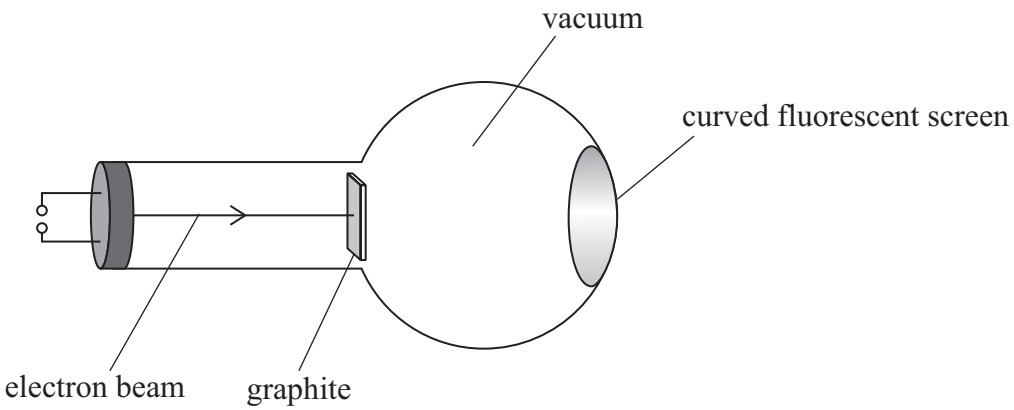

A beam of electrons is accelerated by a high potential difference towards a piece of graphite. The graphite diffracts the electron beam, producing a diffraction pattern on the fluorescent screen.

(a) State what is meant by diffraction.

(2)

(b) An electron is accelerated through a potential difference of 4.9 kV.

(i) Show that the de Broglie wavelength for the electron is about 1.8×10^{-11} m.

(4)

DO NOT WRITE IN THIS AREA
DO NOT WRITE IN THIS AREA
DO NOT WRITE IN THIS AREA

DO NOT WRITE IN THIS AREA
DO NOT WRITE IN THIS AREA
DO NOT WRITE IN THIS AREA

(ii) A student suggests that the beam of electrons would produce a diffraction pattern if a diffraction grating with 5000 lines per cm was used.

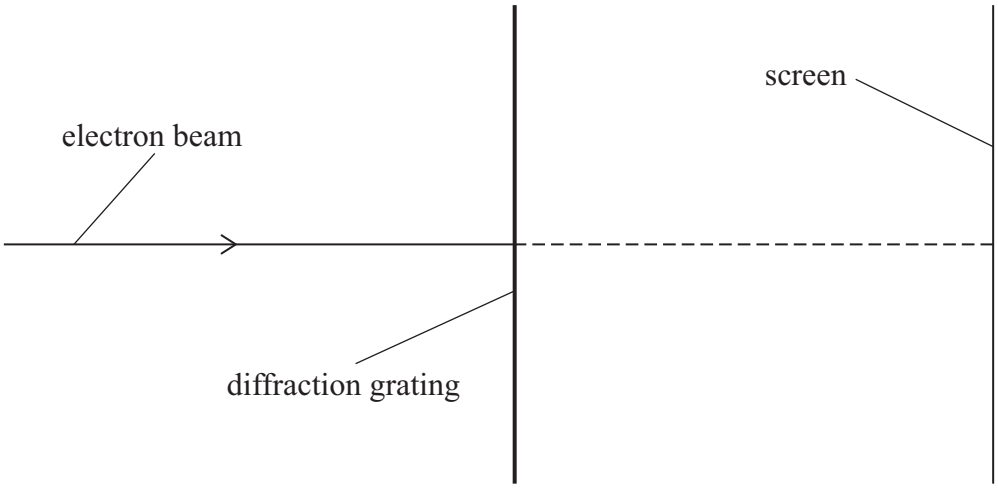

Deduce whether a second order maximum would be clearly visible on a screen. The screen is placed about a metre away from the grating.

$\lambda = 1.8 \times 10^{-11}$ m

(3)

.....

.....

.....

.....

.....

(Total for Question 15 = 9 marks)

16 A student connected the circuit shown.

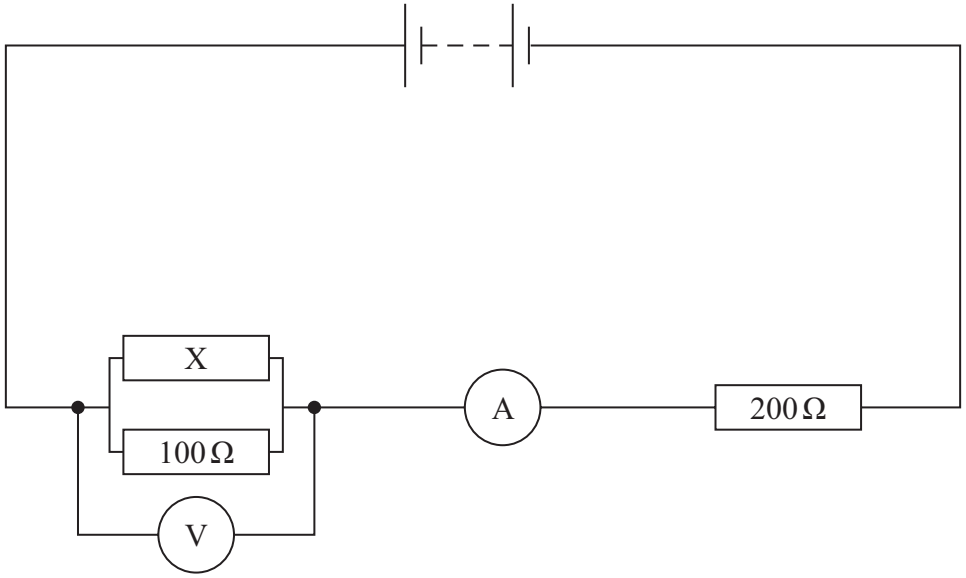

The battery has an e.m.f. of 6.00 V and negligible internal resistance.

(a) State what is meant by an e.m.f. of 6.00 V.

(1)

(b) The reading on the voltmeter is 1.64 V.

(i) Show that the reading on the ammeter is about 20 mA.

(3)

DO NOT WRITE IN THIS AREA
DO NOT WRITE IN THIS AREA
DO NOT WRITE IN THIS AREA

DO NOT WRITE IN THIS AREA
DO NOT WRITE IN THIS AREA
DO NOT WRITE IN THIS AREA

(ii) Determine the resistance of resistor X.

(3)

Resistance of resistor X = ...

(iii) Determine the power dissipated in the 100 Ω resistor.

(2)

Power = ...

(c) The student makes the following prediction.

> If I switch the positions of the 100 Ω resistor and the 200 Ω resistor, then the reading on the voltmeter will increase.

Discuss the student's prediction.

You do not need to include calculations in your answer.

(2)

(Total for Question 16 = 11 marks)

17 A vibrating tuning fork is placed near to the open end of a tube that is closed at the other end, as shown.

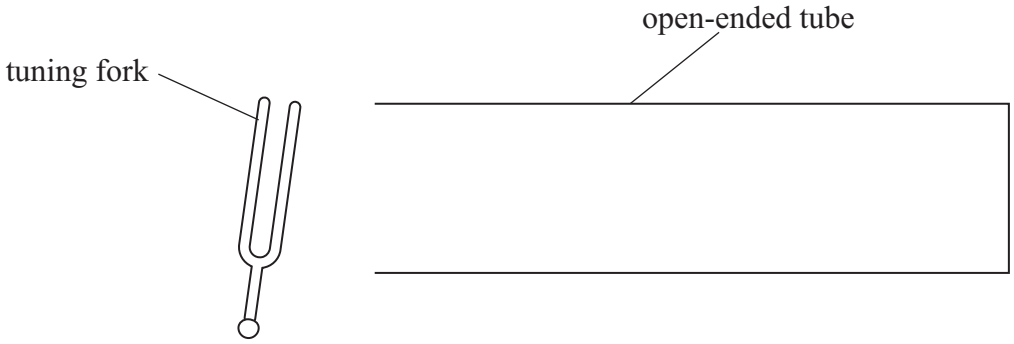

*(a) Describe how a stationary wave is formed inside the tube.

(6)

DO NOT WRITE IN THIS AREA
DO NOT WRITE IN THIS AREA
DO NOT WRITE IN THIS AREA

DO NOT WRITE IN THIS AREA
DO NOT WRITE IN THIS AREA
DO NOT WRITE IN THIS AREA

(b) When the length of the tube was 20.4 cm, the simplest possible stationary wave was formed inside the tube.

(i) Calculate the frequency of the sound produced by the tube.

speed of sound in air = 340 m s^{-1}

(3)

Frequency = ...

(ii) The actual frequency of the sound produced by the tube is slightly less than the calculated value.

Suggest why.

(2)

(Total for Question 17 = 11 marks)

18 Some types of glue can be hardened by exposure to ultraviolet (UV) light.

(a) One type of UV lamp contains mercury atoms in an evacuated glass tube. When a large potential difference is applied between two electrodes in the tube, electrons move between the two electrodes. These electrons collide with the mercury atoms in the tube.
These mercury atoms then emit photons.

Explain why the mercury atoms emit photons.

(2)

(b) A technician is replacing the screen on a mobile phone. He spreads a layer of glue over the phone surface and attaches the glass screen. The glue is then hardened when exposed to UV light.

The equipment used and screen dimensions are as shown in the following diagram.

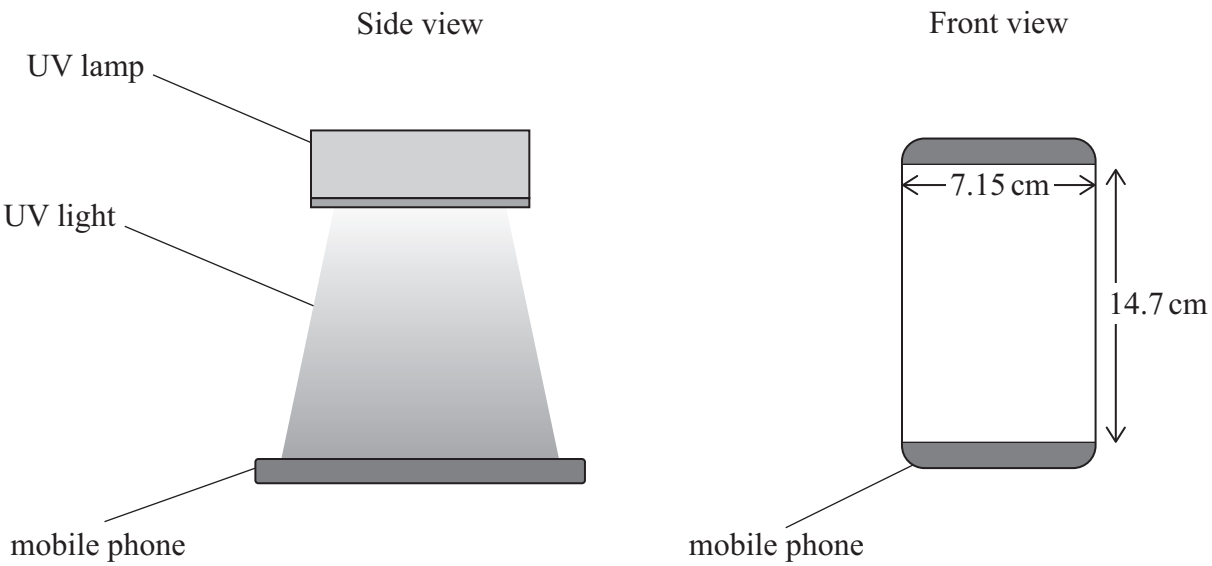

The intensity of the UV light received on the screen is 50 mW cm^{-2}.

The glue takes 25 s to harden.

DO NOT WRITE IN THIS AREA
DO NOT WRITE IN THIS AREA
DO NOT WRITE IN THIS AREA

DO NOT WRITE IN THIS AREA
DO NOT WRITE IN THIS AREA
DO NOT WRITE IN THIS AREA

(i) Show that the total energy incident on the glass screen during this time is about 130 J.

(4)

(ii) Determine the number of photons incident on the glass screen in this time.

wavelength of UV light = 395 nm

(4)

Number of photons = ...

(c) The potential difference applied between the electrodes in the UV lamp is increased.

Explain the effect this would have on the frequency of the UV light produced by the lamp.

(2)

.....

.....

.....

.....

(d) Suggest why the hardening time of the glue is reduced if the UV lamp is moved closer to the mobile phone screen.

(2)

.....

.....

.....

.....

(Total for Question 18 = 14 marks)

TOTAL FOR SECTION B = 70 MARKS
TOTAL FOR PAPER = 80 MARKS

DO NOT WRITE IN THIS AREA
DO NOT WRITE IN THIS AREA
DO NOT WRITE IN THIS AREA

DO NOT WRITE IN THIS AREA
DO NOT WRITE IN THIS AREA
DO NOT WRITE IN THIS AREA

List of data, formulae and relationships

Acceleration of free fall	$g = 9.81$ m s^{-2}	(close to Earth's surface)
Electron charge	$e = -1.60 \times 10^{-19}$ C	
Electron mass	$m_e = 9.11 \times 10^{-31}$ kg	
Electronvolt	$1\,\text{eV} = 1.60 \times 10^{-19}$ J	
Gravitational field strength	$g = 9.81$ N kg^{-1}	(close to Earth's surface)
Planck constant	$h = 6.63 \times 10^{-34}$ J s	
Speed of light in a vacuum	$c = 3.00 \times 10^{8}$ m s^{-1}	

Unit 1

Mechanics

Kinematic equations of motion

$$s = \frac{(u + v)t}{2}$$

$$v = u + at$$

$$s = ut + \frac{1}{2}at^2$$

$$v^2 = u^2 + 2as$$

Forces

$$\Sigma F = ma$$

$$g = \frac{F}{m}$$

$$W = mg$$

Momentum

$$p = mv$$

Moment of force

$$\text{moment} = Fx$$

Work and energy

$$\Delta W = F\Delta s$$

$$E_k = \frac{1}{2}mv^2$$

$$\Delta E_{grav} = mg\Delta h$$

Power

$$P = \frac{E}{t}$$

$$P = \frac{W}{t}$$

Efficiency

$$\text{efficiency} = \frac{\text{useful energy output}}{\text{total energy input}}$$

$$\text{efficiency} = \frac{\text{useful power output}}{\text{total power input}}$$

Materials

Density $\rho = \frac{m}{V}$

Stokes' law $F = 6\pi\eta r v$

Hooke's law $\Delta F = k\Delta x$

Elastic strain energy $\Delta E_{el} = \frac{1}{2} F \Delta x$

Young modulus $E = \frac{\sigma}{\varepsilon}$ where

$$\text{Stress } \sigma = \frac{F}{A}$$

$$\text{Strain } \varepsilon = \frac{\Delta x}{x}$$

DO NOT WRITE IN THIS AREA
DO NOT WRITE IN THIS AREA
DO NOT WRITE IN THIS AREA

DO NOT WRITE IN THIS AREA
DO NOT WRITE IN THIS AREA
DO NOT WRITE IN THIS AREA

Unit 2

Waves

Wave speed	$v = f\lambda$
Speed of a transverse wave on a string	$v = \sqrt{\frac{T}{\mu}}$
Intensity of radiation	$I = \frac{P}{A}$
Refractive index	$n_1 \sin\theta_1 = n_2 \sin\theta_2$
	$n = \frac{c}{v}$
Critical angle	$\sin C = \frac{1}{n}$
Diffraction grating	$n\lambda = d\sin\theta$

Electricity

Potential difference	$V = \frac{W}{Q}$
Resistance	$R = \frac{V}{I}$
Electrical power, energy	$P = VI$
	$P = I^2R$
	$P = \frac{V^2}{R}$
	$W = VIt$
Resistivity	$R = \frac{\rho l}{A}$
Current	$I = \frac{\Delta Q}{\Delta t}$
	$I = nqvA$
Resistors in series	$R = R_1 + R_2 + R_3$
Resistors in parallel	$\frac{1}{R} = \frac{1}{R_1} + \frac{1}{R_2} + \frac{1}{R_3}$

Particle nature of light

Photon model	$E = hf$
Einstein's photoelectric equation	$hf = \phi + \frac{1}{2}mv^2_{max}$
de Broglie wavelength	$\lambda = \frac{h}{p}$

BLANK PAGE

DO NOT WRITE IN THIS AREA
DO NOT WRITE IN THIS AREA
DO NOT WRITE IN THIS AREA