GradeMax

Pearson

Clarification Notice

Wednesday 4 June 2025
Pearson Edexcel International A level Physics – WPH15_01

In question 19(b), the final line of the question is incorrect:
'intensity of light received at the surface of Aita = 1360 W m^{-2}'

Please instruct candidates to amend their question paper to:
'intensity of light received at the Earth from the Sun = 1360 W m^{-2}'

We apologise for any confusion caused.

E78758A

E 7 8 7 5 8 A

P78758EA



Please check the examination details below before entering your candidate information

Candidate surname	Other names

Centre Number | Candidate Number

Pearson Edexcel International Advanced Level

Wednesday 4 June 2025

Morning (Time: 1 hour 45 minutes)

Paper reference **WPH15/01**

Physics

International Advanced Level
UNIT 5: Thermodynamics, Radiation, Oscillations and Cosmology

You must have:
Scientific calculator, ruler

Total Marks

Instructions

- Use **black** ink or ball-point pen.
- If pencil is used for diagrams/sketches/graphs it must be dark (HB or B).
- **Fill in the boxes** at the top of this page with your name, centre number and candidate number.
- Answer **all** questions.
- Answer the questions in the spaces provided – *there may be more space than you need.*
- **Show all your working out** in calculations and **include units** where appropriate.

Information

- The total mark for this paper is 90.
- The marks for **each** question are shown in brackets – *use this as a guide as to how much time to spend on each question.*
- In the question marked with an **asterisk (*)**, marks will be awarded for your ability to structure your answer logically, showing how the points that you make are related or follow on from each other where appropriate.
- The list of data, formulae and relationships is printed at the end of this booklet.

Advice

- Read each question carefully before you start to answer it.
- Try to answer every question.
- Check your answers if you have time at the end.

Turn over ▶

P78758A

©2025 Pearson Education Ltd.
Y:1/1/1/1/

P 7 8 7 5 8 A 0 1 3 2

Pearson

SECTION A

Answer ALL questions.

For questions 1–10, in Section A, select one answer from A to D and put a cross in the box ☒. If you change your mind, put a line through the box ☒ and then mark your new answer with a cross ☒.

1 Which of the following statements applies to both electric fields and gravitational fields?

☒ **A** Each field causes a force on all particles.

☒ **B** Each field can cause an attractive or repulsive force.

☒ **C** Field strength is proportional to the square of the distance from a point source.

☒ **D** Field strength is inversely proportional to the square of the distance from a point source.

(Total for Question 1 = 1 mark)

2 A mass is driven into oscillation, and resonance takes place.

Which of the following statements is **not** correct?

☒ **A** The amplitude of oscillation of the mass is a maximum.

☒ **B** The frequency of oscillation of the mass is a maximum.

☒ **C** The mass is driven at its natural frequency.

☒ **D** The transfer of energy to the mass is a maximum.

(Total for Question 2 = 1 mark)

3 Energy is released when the fusion of low mass nuclei takes place.
Energy is also released when the fission of high mass nuclei takes place.

Which row of the table shows the change in binding energy per nucleon (B.E. / nucleon) for fusion and fission?

		Nuclear fusion	Nuclear fission
☒	**A**	B.E. / nucleon decreases	B.E. / nucleon decreases
☒	**B**	B.E. / nucleon decreases	B.E. / nucleon increases
☒	**C**	B.E. / nucleon increases	B.E. / nucleon decreases
☒	**D**	B.E. / nucleon increases	B.E. / nucleon increases

(Total for Question 3 = 1 mark)

DO NOT WRITE IN THIS AREA
DO NOT WRITE IN THIS AREA
DO NOT WRITE IN THIS AREA

DO NOT WRITE IN THIS AREA
DO NOT WRITE IN THIS AREA
DO NOT WRITE IN THIS AREA

4 A megaparsec, Mpc, is a unit of distance used by astronomers.
$1\,\text{Mpc} = 3.1 \times 10^{22}\,\text{m}$

Recent estimates of the Hubble constant give a value of $74\,\text{km}\,\text{s}^{-1}\,\text{Mpc}^{-1}$.

Which of the following gives the age of the universe in seconds?

☒ **A** $\dfrac{74}{3.1 \times 10^{22}}$

☒ **B** $\dfrac{74 \times 10^{3}}{3.1 \times 10^{22}}$

☒ **C** $\dfrac{3.1 \times 10^{22}}{74}$

☒ **D** $\dfrac{3.1 \times 10^{22}}{74 \times 10^{3}}$

(Total for Question 4 = 1 mark)

5 On Earth, hydrogen is observed to emit a spectral line with a wavelength of 410 nm. The same spectral line is observed in the radiation received from a galaxy that is moving away from the Earth at a speed of $0.1\,c$.

Which of the following is the wavelength of the spectral line in the radiation received from the galaxy?

☒ **A** 451 nm

☒ **B** 430 nm

☒ **C** 410 nm

☒ **D** 369 nm

(Total for Question 5 = 1 mark)

6 In a laboratory, the background count rate is 22 counts per minute.

A detector is placed 25 cm from a gamma source. The count rate recorded by the detector is 54 counts per minute.

The detector is then placed 50 cm from the source.

Which of the following is the expected number of counts per minute?

☒ **A** $\left(\frac{54 - 22}{2}\right) + 22$

☒ **B** $\left(\frac{54 - 22}{4}\right) + 22$

☒ **C** $\left(\frac{54 + 22}{2}\right) - 22$

☒ **D** $\left(\frac{54 + 22}{4}\right) - 22$

(Total for Question 6 = 1 mark)

7 A student used a detector to determine the intensity of radiation from a source of gamma radiation. After correcting for background, the intensity of radiation recorded by the detector was I_0.

A lead sheet of thickness 2.5 cm was placed between the source and the detector. The corrected intensity of radiation recorded by the detector was now $0.50\,I_0$.

The original lead sheet was replaced by a new lead sheet of thickness 7.5 cm.

Which of the following was the corrected intensity of gamma radiation recorded by the detector?

☒ **A** $0.33\,I_0$

☒ **B** $0.25\,I_0$

☒ **C** $0.13\,I_0$

☒ **D** $0.06\,I_0$

(Total for Question 7 = 1 mark)

DO NOT WRITE IN THIS AREA
DO NOT WRITE IN THIS AREA
DO NOT WRITE IN THIS AREA

DO NOT WRITE IN THIS AREA
DO NOT WRITE IN THIS AREA
DO NOT WRITE IN THIS AREA

8 Two stars, X and Y, have the same luminosity.

The graph shows how the intensity I of radiation received at Earth from star X and star Y varies with wavelength λ.

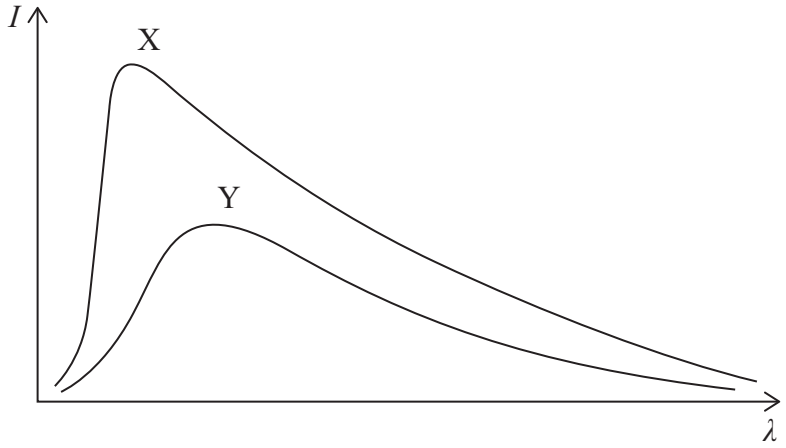

Which of the following statements can be deduced from the graph?

☒ **A** Star X has a higher surface temperature and is closer than star Y.

☒ **B** Star X has a lower surface temperature and is closer than star Y.

☒ **C** Star X has a higher surface temperature and is further away than star Y.

☒ **D** Star X has a lower surface temperature and is further away than star Y.

(Total for Question 8 = 1 mark)

Questions 9 and 10 refer to the following information.

The graph shows how the displacement varies with time for an object performing simple harmonic motion.

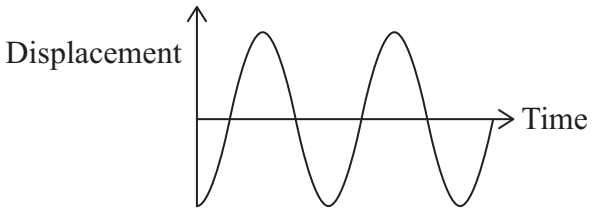

Four graphs of a quantity plotted against time, for the same period of time, are shown below.

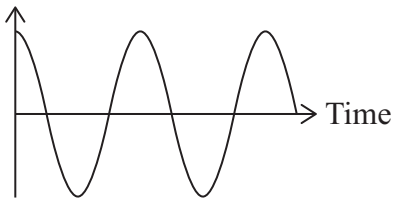

A

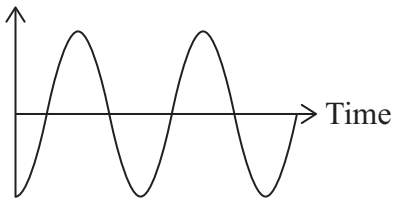

B

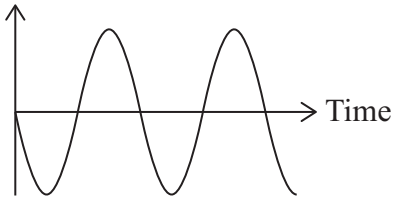

C

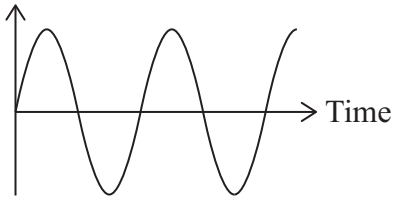

D

9 Which graph shows how the velocity of the object varies with time?

- ☒ **A**
- ☒ **B**
- ☒ **C**
- ☒ **D**

(Total for Question 9 = 1 mark)

10 Which graph shows how the acceleration of the object varies with time?

- ☒ **A**
- ☒ **B**
- ☒ **C**
- ☒ **D**

(Total for Question 10 = 1 mark)

TOTAL FOR SECTION A = 10 MARKS

DO NOT WRITE IN THIS AREA
DO NOT WRITE IN THIS AREA
DO NOT WRITE IN THIS AREA

DO NOT WRITE IN THIS AREA
DO NOT WRITE IN THIS AREA
DO NOT WRITE IN THIS AREA

SECTION B

Answer ALL questions in the spaces provided.

11 The photograph shows a woman making a bungee jump. The woman was attached to a platform high above the ground by an elastic rope.

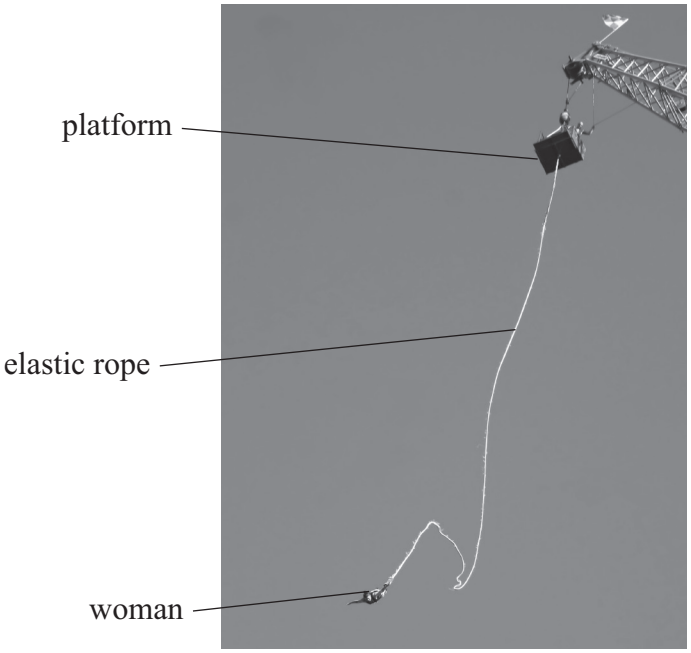

(Source: © Pearson Asset Library)

After reaching the lowest point of the bungee jump, the woman oscillated with simple harmonic motion of period 1.50 s.

The woman returned to the platform to repeat the bungee jump. She was fastened to a second person. The same elastic rope was used for the bungee jump.

After reaching the lowest point of the bungee jump, the two people oscillated with simple harmonic motion.

Calculate the period of oscillation of the two people.

mass of woman = 67 kg
mass of second person = 72 kg

Period of oscillation = ...

(Total for Question 11 = 3 marks)

12 The photograph shows a student observing the tracks of alpha particles and beta particles in a cloud chamber.



(Source: © NASA Archive/Alamy Stock Photo)

The particles ionise the air as they pass through the cloud chamber. Liquid droplets form around the ions and the droplets form visible tracks.

The alpha particle tracks are thick and straight. The beta particle tracks are thin and twisted.

The student gives the following explanation for the appearance of the tracks.

"*The alpha particle tracks are thick because the alpha particles are massive particles. The tracks are straight because the alpha particles are highly ionising.*

The beta particles cause a similar amount of ionisation as the alpha particles. The beta particle tracks are thin and twisted because beta particles are much less massive than alpha particles."

Criticise the student's explanation.

(Total for Question 12 = 4 marks)

DO NOT WRITE IN THIS AREA
DO NOT WRITE IN THIS AREA
DO NOT WRITE IN THIS AREA

DO NOT WRITE IN THIS AREA
DO NOT WRITE IN THIS AREA
DO NOT WRITE IN THIS AREA

13 A satellite of mass 6.50×10^3 kg is initially at the surface of the Earth. The satellite is launched into a circular orbit of radius 4.22×10^7 m.

(a) Calculate the change in gravitational potential energy of the satellite.

mass of Earth = 5.98×10^{24} kg
radius of Earth = 6.37×10^6 m

(3)

Change in gravitational potential energy = ...

(b) The satellite is in orbit above the equator.

Deduce whether the satellite would appear to be stationary above the surface of the Earth.

period of rotation of Earth about its axis = 8.64×10^4 s

(4)

(Total for Question 13 = 7 marks)

14 Astronomers use a variety of methods to determine the distances to astronomical objects.

(a) Explain why trigonometric parallax can only be used to determine the distance to objects that are relatively close to the Earth.

(2)

(b) For objects that are not close to the Earth, the method of standard candles is used.

(i) State what is meant by a standard candle.

(1)

(ii) Describe how the method of standard candles is used to determine the distance to a distant star cluster.

(3)

(Total for Question 14 = 6 marks)

DO NOT WRITE IN THIS AREA
DO NOT WRITE IN THIS AREA
DO NOT WRITE IN THIS AREA

DO NOT WRITE IN THIS AREA
DO NOT WRITE IN THIS AREA
DO NOT WRITE IN THIS AREA

BLANK PAGE

15 The body of a racing car is connected to the wheels of the racing car by a suspension system, as shown.

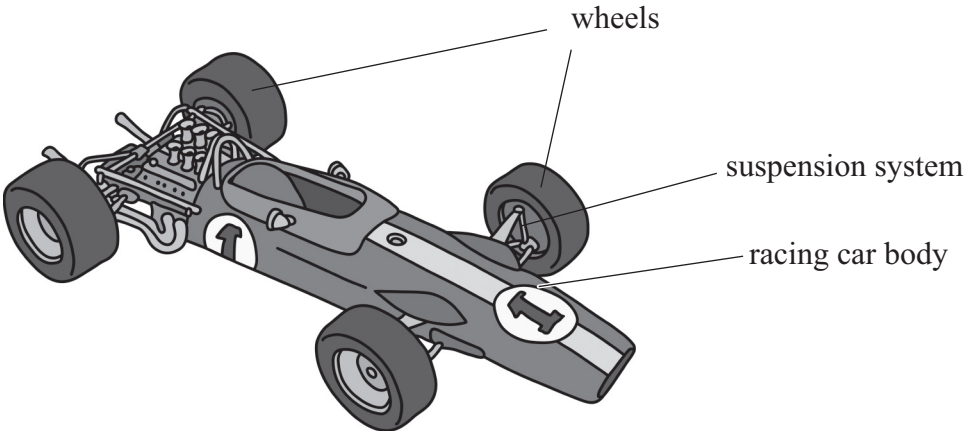

(Source: © Jana Vostal / Alamy Stock Vector)

When the body of the racing car is displaced vertically from its equilibrium position, the suspension system causes the car to oscillate with simple harmonic motion.

(a) State the conditions for an object to oscillate with simple harmonic motion.

(2)

.....

.....

.....

.....

(b) The graph shows how the vertical displacement y of the car body varies with time t.

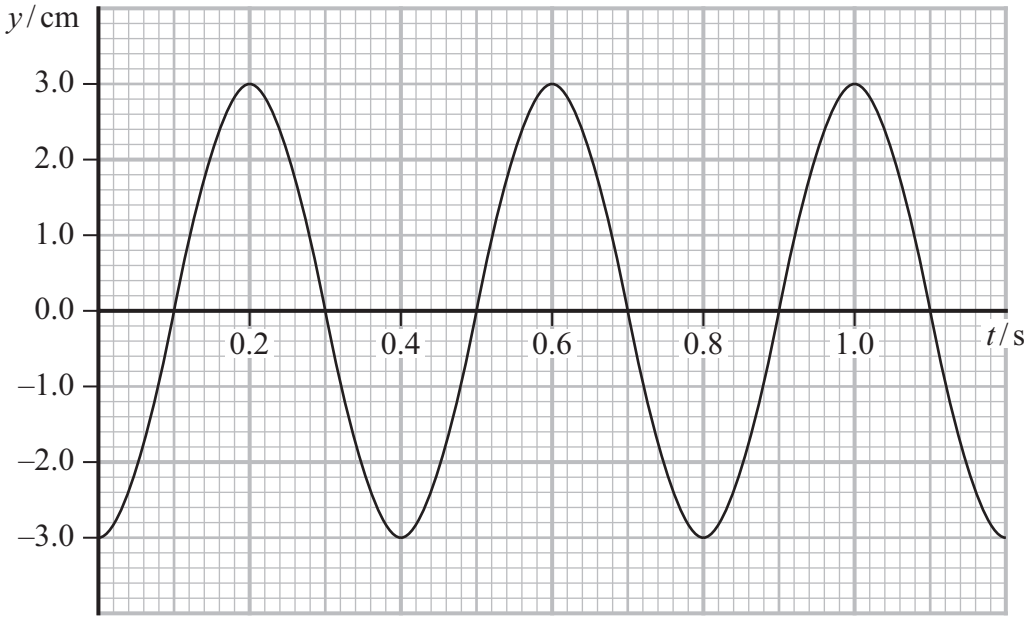

DO NOT WRITE IN THIS AREA
DO NOT WRITE IN THIS AREA
DO NOT WRITE IN THIS AREA

DO NOT WRITE IN THIS AREA
DO NOT WRITE IN THIS AREA
DO NOT WRITE IN THIS AREA

Determine the maximum velocity of the car body.

(4)

Maximum velocity of car body = ...

(c) Explain how damping causes the amplitude of oscillation of the car body to decrease.

(2)

(Total for Question 15 = 8 marks)

16 A food delivery company uses ice packs to keep food cold during delivery. Each ice pack consists of a block of ice in a waterproof bag.

Each block of ice is initially rectangular, as shown.

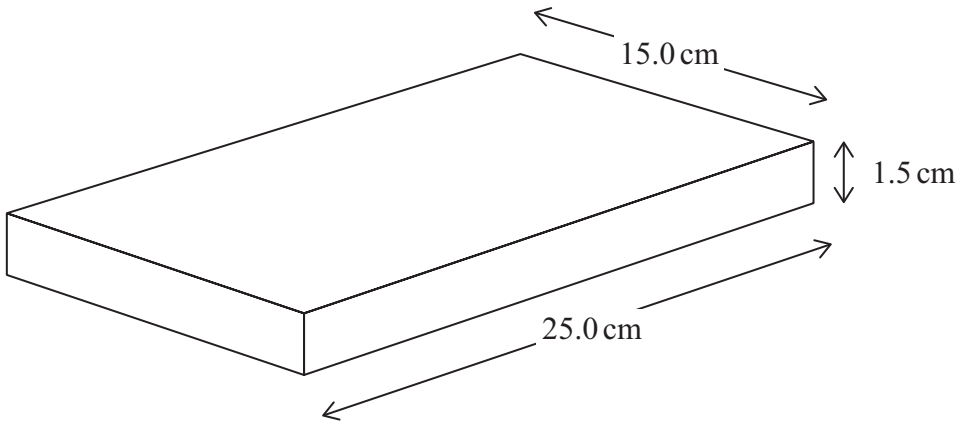

(a) Water at 0.0 °C is frozen to form the block of ice. The block is cooled to a temperature of –7.5 °C. The block is then sealed in the waterproof bag.

Determine the energy transferred to form the ice block and reduce its temperature to –7.5 °C.

density of ice = 920 kg m^{-3}
specific latent heat of fusion of water = 3.4×10^5 J kg^{-1}
specific heat capacity of ice = 2100 J kg^{-1} K^{-1}

(5)

Energy transferred = ...

DO NOT WRITE IN THIS AREA
DO NOT WRITE IN THIS AREA
DO NOT WRITE IN THIS AREA

DO NOT WRITE IN THIS AREA
DO NOT WRITE IN THIS AREA
DO NOT WRITE IN THIS AREA

(b) The website of the delivery company includes the following statement.

> *If the ice has melted by the time you receive your delivery, this means that energy from the ice has been used to keep the food cold.*

Explain why the statement made by the company is **not** correct.

(2)

.....

.....

.....

.....

.....

.....

(Total for Question 16 = 7 marks)

17 The Gaia globe is a three-dimensional model of the Earth, as shown. The inflated globe is suspended from above and is able to rotate.

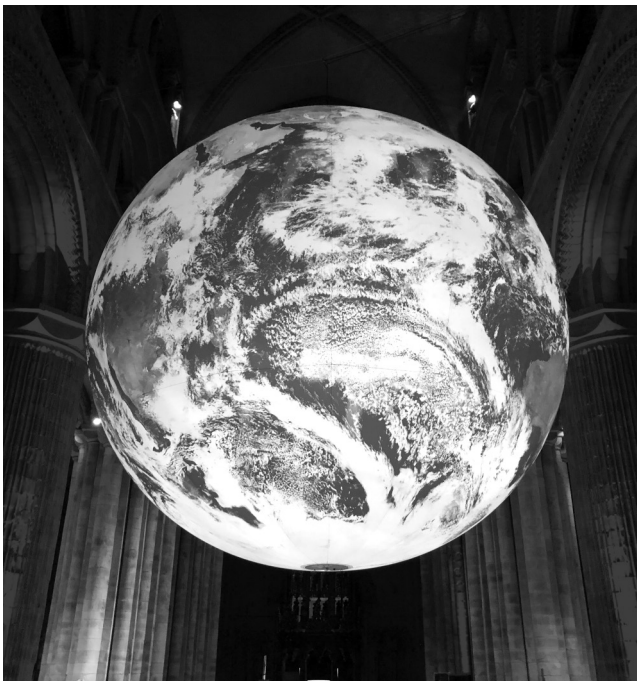

The globe is filled with nitrogen gas. When fully inflated the globe has a radius of 3.50 m.

(a) Calculate the mass of nitrogen gas needed to exert a pressure of 1.12×10^5 Pa inside the globe, at a temperature of 22.0 °C.

mass of a nitrogen molecule = 4.67×10^{-26} kg

(5)

Mass of nitrogen gas = ...

DO NOT WRITE IN THIS AREA
DO NOT WRITE IN THIS AREA
DO NOT WRITE IN THIS AREA

DO NOT WRITE IN THIS AREA
DO NOT WRITE IN THIS AREA
DO NOT WRITE IN THIS AREA

(b) The globe rotates with an angular velocity of $2.76 \times 10^{-2}\,\text{rad}\,\text{s}^{-1}$.

Calculate the time taken for the globe to make one complete rotation.

(2)

Time taken for one rotation = ...

(c) A solid sphere has the same diameter as the Gaia globe.

Calculate the mass of the sphere that would give a value of g, at its surface, of $9.8\,\text{N}\,\text{kg}^{-1}$.

(2)

Mass of sphere = ...

(Total for Question 17 = 9 marks)

18 The Hertzsprung-Russell diagram shows the relationship between the luminosity and the surface temperature of a range of stars.

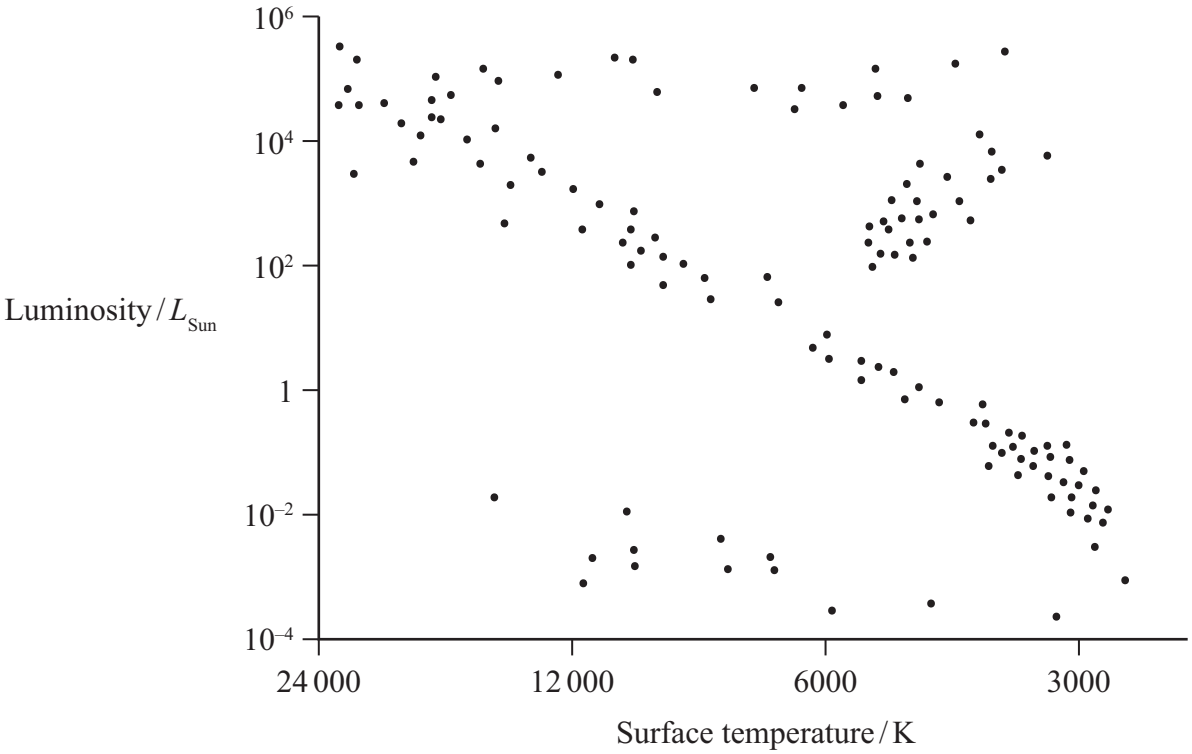

(a) The Sun is a main sequence star.

(i) Label the position of the Sun on the diagram with the letter **S**.

(1)

(ii) In the final stages of the Sun's evolution, it will become a white dwarf star.

Draw on the diagram a possible path of the Sun as it evolves to a white dwarf star.

(2)

DO NOT WRITE IN THIS AREA
DO NOT WRITE IN THIS AREA
DO NOT WRITE IN THIS AREA

DO NOT WRITE IN THIS AREA
DO NOT WRITE IN THIS AREA
DO NOT WRITE IN THIS AREA

*(b) Describe the stages in the evolution of the Sun from a main sequence star to a white dwarf star.

(6)

(c) Explain why the Sun will stay on the main sequence for a much greater time than the most massive main sequence stars.

(2)

(Total for Question 18 = 11 marks)

19 Tau Ceti is a main sequence star similar to the Sun. Several planets orbit Tau Ceti.

(a) (i) The spectrum of electromagnetic radiation emitted by Tau Ceti has a maximum intensity at a frequency of 5.50×10^{14} Hz.

Show that the surface temperature of Tau Ceti is about 5300 K.

(3)

(ii) Calculate the average kinetic energy of gas atoms at the surface of Tau Ceti.

(2)

Average kinetic energy of gas atoms = ...

DO NOT WRITE IN THIS AREA
DO NOT WRITE IN THIS AREA
DO NOT WRITE IN THIS AREA

DO NOT WRITE IN THIS AREA
DO NOT WRITE IN THIS AREA
DO NOT WRITE IN THIS AREA

(b) Aita is a planet in orbit around Tau Ceti.

A scientist suggests that Aita receives the same intensity of light from Tau Ceti as the Earth receives from the Sun.

Evaluate the accuracy of this suggestion.

radius of Tau Ceti = 5.52×10^{8} m
distance between Aita and Tau Ceti = 8.05×10^{10} m
intensity of light received at the surface of Aita = 1360 W m^{-2}

(5)

(Total for Question 19 = 10 marks)

20 The space probe Galileo was sent into space to study the planet Jupiter. The space probe was powered using plutonium-238.

Plutonium-238 decays to an isotope of uranium by emitting an alpha particle.

(a) Complete the nuclear equation for the decay of plutonium-238.

(2)

$$^{238}_{\dots}\mathrm{Pu} \rightarrow {}^{\dots}_{92}\mathrm{U} + {}^{\dots}_{\dots}\alpha$$

(b) The space probe was powered by the energy released in the decay of plutonium-238.

(i) Show that the energy released in the decay of one nucleus of plutonium-238 is about 5.7 MeV.

mass of plutonium nucleus = 3.9516×10^{-25} kg
mass of uranium nucleus = 3.8851×10^{-25} kg
mass of alpha particle = 6.6399×10^{-27} kg

(4)

.....

.....

.....

.....

.....

.....

.....

.....

.....

.....

DO NOT WRITE IN THIS AREA
DO NOT WRITE IN THIS AREA
DO NOT WRITE IN THIS AREA

DO NOT WRITE IN THIS AREA
DO NOT WRITE IN THIS AREA
DO NOT WRITE IN THIS AREA

(ii) When the space probe was launched, the decay of plutonium-238 produced a power of 550 W.

A website states that there was 1.00 kg of plutonium-238 when the space probe was launched.

Deduce whether the website statement is accurate.

number of atoms in 0.238 kg of plutonium = 6.00×10^{23}
half-life of plutonium-238 = 87.7 years
1 year = 3.15×10^{7} s

(5)

(iii) The space probe took 74 months to travel to Jupiter.

Calculate the power produced when the space probe arrived at Jupiter, due to the decay of plutonium-238.

1 month = 2.63×10^6 s

(2)

Power produced = ...

(c) Jupiter is much further away from the Sun than Mars is. A space probe to Mars was powered by solar cells.

Suggest why solar cells were **not** suitable for a space probe travelling to Jupiter.

(2)

(Total for Question 20 = 15 marks)

TOTAL FOR SECTION B = 80 MARKS
TOTAL FOR PAPER = 90 MARKS

DO NOT WRITE IN THIS AREA
DO NOT WRITE IN THIS AREA
DO NOT WRITE IN THIS AREA

DO NOT WRITE IN THIS AREA
DO NOT WRITE IN THIS AREA
DO NOT WRITE IN THIS AREA

List of data, formulae and relationships

Acceleration of free fall	$g = 9.81$ m s^{-2}	(close to Earth's surface)
Boltzmann constant	$k = 1.38 \times 10^{-23}$ J K^{-1}	
Coulomb's law constant	$k = 1/4\pi\varepsilon_0$	
	$= 8.99 \times 10^9$ N m^2 C^{-2}	
Electron charge	$e = -1.60 \times 10^{-19}$ C	
Electron mass	$m_e = 9.11 \times 10^{-31}$ kg	
Electronvolt	$1\,\text{eV} = 1.60 \times 10^{-19}$ J	
Gravitational constant	$G = 6.67 \times 10^{-11}$ N m^2 kg^{-2}	
Gravitational field strength	$g = 9.81$ N kg^{-1}	(close to Earth's surface)
Permittivity of free space	$\varepsilon_0 = 8.85 \times 10^{-12}$ F m^{-1}	
Planck constant	$h = 6.63 \times 10^{-34}$ J s	
Proton mass	$m_p = 1.67 \times 10^{-27}$ kg	
Speed of light in a vacuum	$c = 3.00 \times 10^8$ m s^{-1}	
Stefan-Boltzmann constant	$\sigma = 5.67 \times 10^{-8}$ W m^{-2} K^{-4}	
Unified atomic mass unit	$u = 1.66 \times 10^{-27}$ kg	

Unit 1

Mechanics

Kinematic equations of motion

$$s = \frac{(u + v)t}{2}$$

$$v = u + at$$

$$s = ut + \frac{1}{2}at^2$$

$$v^2 = u^2 + 2as$$

Forces

$$\Sigma F = ma$$

$$g = \frac{F}{m}$$

$$W = mg$$

Momentum

$$p = mv$$

Moment of force

$$\text{moment} = Fx$$

Work and energy

$$\Delta W = F\Delta s$$

$$E_k = \frac{1}{2}mv^2$$

$$\Delta E_{grav} = mg\Delta h$$

Power

$$P = \frac{E}{t}$$

$$P = \frac{W}{t}$$

Efficiency

$$\text{efficiency} = \frac{\text{useful energy output}}{\text{total energy input}}$$

$$\text{efficiency} = \frac{\text{useful power output}}{\text{total power input}}$$

Materials

Density $\rho = \frac{m}{V}$

Stokes' law $F = 6\pi\eta r v$

Hooke's law $\Delta F = k\Delta x$

Elastic strain energy $\Delta E_{el} = \frac{1}{2} F \Delta x$

Young modulus $E = \frac{\sigma}{\varepsilon}$ where

Stress $\sigma = \frac{F}{A}$

Strain $\varepsilon = \frac{\Delta x}{x}$

DO NOT WRITE IN THIS AREA
DO NOT WRITE IN THIS AREA
DO NOT WRITE IN THIS AREA

DO NOT WRITE IN THIS AREA
DO NOT WRITE IN THIS AREA
DO NOT WRITE IN THIS AREA

Unit 2

Waves

Wave speed	$v = f\lambda$
Speed of a transverse wave on a string	$v = \sqrt{\frac{T}{\mu}}$
Intensity of radiation	$I = \frac{P}{A}$
Refractive index	$n_1 \sin\theta_1 = n_2 \sin\theta_2$
	$n = \frac{c}{v}$
Critical angle	$\sin C = \frac{1}{n}$
Diffraction grating	$n\lambda = d\sin\theta$

Electricity

Potential difference	$V = \frac{W}{Q}$
Resistance	$R = \frac{V}{I}$
Electrical power, energy	$P = VI$
	$P = I^2R$
	$P = \frac{V^2}{R}$
	$W = VIt$
Resistivity	$R = \frac{\rho l}{A}$
Current	$I = \frac{\Delta Q}{\Delta t}$
	$I = nqvA$
Resistors in series	$R = R_1 + R_2 + R_3$
Resistors in parallel	$\frac{1}{R} = \frac{1}{R_1} + \frac{1}{R_2} + \frac{1}{R_3}$

Particle nature of light

Photon model	$E = hf$
Einstein's photoelectric equation	$hf = \phi + \frac{1}{2}mv^2_{max}$
de Broglie wavelength	$\lambda = \frac{h}{p}$



Unit 4

Further mechanics

Impulse	$F\Delta t = \Delta p$
Kinetic energy of a non-relativistic particle	$E_k = \frac{p^2}{2m}$
Motion in a circle	$v = \omega r$
	$T = \frac{2\pi}{\omega}$
	$a = \frac{v^2}{r}$
	$a = r\omega^2$
Centripetal force	$F = ma = \frac{mv^2}{r}$
	$F = mr\omega^2$

Electric and magnetic fields

Electric field	$E = \frac{F}{Q}$
Coulomb's law	$F = \frac{Q_1 Q_2}{4\pi\varepsilon_0 r^2}$
	$E = \frac{Q}{4\pi\varepsilon_0 r^2}$
	$E = \frac{V}{d}$
Electrical potential	$V = \frac{Q}{4\pi\varepsilon_0 r}$
Capacitance	$C = \frac{Q}{V}$
Energy stored in capacitor	$W = \frac{1}{2}QV$
	$W = \frac{1}{2}CV^2$
	$W = \frac{1}{2}\frac{Q^2}{C}$
Capacitor discharge	$Q = Q_0 e^{-t/RC}$

DO NOT WRITE IN THIS AREA
DO NOT WRITE IN THIS AREA
DO NOT WRITE IN THIS AREA

DO NOT WRITE IN THIS AREA
DO NOT WRITE IN THIS AREA
DO NOT WRITE IN THIS AREA

Resistor-capacitor discharge $I = I_0 e^{-t/RC}$

$$V = V_0 e^{-t/RC}$$

$$\ln Q = \ln Q_0 - \frac{t}{RC}$$

$$\ln I = \ln I_0 - \frac{t}{RC}$$

$$\ln V = \ln V_0 - \frac{t}{RC}$$

In a magnetic field $F = Bqv \sin \theta$

$$F = BIl \sin \theta$$

Faraday's and Lenz's laws $\mathscr{E} = \frac{-\mathrm{d}(N\phi)}{\mathrm{d}t}$

Nuclear and particle physics

In a magnetic field $r = \frac{p}{BQ}$

Mass-energy $\Delta E = c^2 \Delta m$

Unit 5

Thermodynamics

Heating

$$\Delta E = mc\Delta\theta$$

$$\Delta E = L\Delta m$$

Ideal gas equation

$$pV = NkT$$

Molecular kinetic theory

$$\tfrac{1}{2}m\langle c^2\rangle = \tfrac{3}{2}kT$$

Nuclear decay

Mass-energy

$$\Delta E = c^2\Delta m$$

Radioactive decay

$$A = \lambda N$$

$$\frac{\mathrm{d}N}{\mathrm{d}t} = -\lambda N$$

$$\lambda = \frac{\ln 2}{t_{1/2}}$$

$$N = N_0 \mathrm{e}^{-\lambda t}$$

$$A = A_0 \mathrm{e}^{-\lambda t}$$

Oscillations

Simple harmonic motion

$$F = -kx$$

$$a = -\omega^2 x$$

$$x = A\cos\omega t$$

$$v = -A\omega\sin\omega t$$

$$a = -A\omega^2\cos\omega t$$

$$T = \frac{1}{f} = \frac{2\pi}{\omega}$$

$$\omega = 2\pi f$$

Simple harmonic oscillator

$$T = 2\pi\sqrt{\frac{m}{k}}$$

$$T = 2\pi\sqrt{\frac{l}{g}}$$

DO NOT WRITE IN THIS AREA
DO NOT WRITE IN THIS AREA
DO NOT WRITE IN THIS AREA

DO NOT WRITE IN THIS AREA
DO NOT WRITE IN THIS AREA
DO NOT WRITE IN THIS AREA

Astrophysics and cosmology

Gravitational field strength	$g = \frac{F}{m}$
Gravitational force	$F = \frac{Gm_1m_2}{r^2}$
Gravitational field	$g = \frac{Gm}{r^2}$
Gravitational potential	$V_{grav} = \frac{-Gm}{r}$
Stefan-Boltzmann law	$L = \sigma AT^4$
Wien's law	$\lambda_{max}T = 2.898 \times 10^{-3}\,\text{m K}$
Intensity of radiation	$I = \frac{L}{4\pi d^2}$
Redshift of electromagnetic radiation	$z = \frac{\Delta\lambda}{\lambda} \approx \frac{\Delta f}{f} \approx \frac{v}{c}$
Cosmological expansion	$v = H_0d$

DO NOT WRITE IN THIS AREA
DO NOT WRITE IN THIS AREA
DO NOT WRITE IN THIS AREA

BLANK PAGE