Please check the examination details below before entering your candidate information

Candidate surname	Other names

Centre Number | Candidate Number

Pearson Edexcel International Advanced Level

Monday 9 June 2025

Morning (Time: 1 hour 20 minutes)

Paper reference **WPH16/01**

Physics

International Advanced Level
UNIT 6: Practical Skills in Physics II

You must have:
Scientific calculator, ruler

Total Marks

Instructions

- Use **black** ink or ball-point pen.
- If pencil is used for diagrams/sketches/graphs it must be dark (HB or B).
- **Fill in the boxes** at the top of this page with your name, centre number and candidate number.
- Answer **all** questions.
- Answer the questions in the spaces provided – *there may be more space than you need.*
- **Show all your working out** in calculations and **include units** where appropriate.

Information

- The total mark for this paper is 50.
- The marks for **each** question are shown in brackets – *use this as a guide as to how much time to spend on each question.*
- The list of data, formulae and relationships is printed at the end of this booklet.

Advice

- Read each question carefully before you start to answer it.
- Try to answer every question.
- Check your answers if you have time at the end.

Turn over ▶

P78836A

©2025 Pearson Education Ltd.
M:1/1/1/

P 7 8 8 3 6 A 0 1 2 0

Pearson

Answer ALL questions.

1 A student investigated the charging and discharging of a capacitor.

(a) The student connected a 680 μF electrolytic capacitor in a circuit with a power supply and a switch.

(i) Describe two safety precautions the student should take when using electrolytic capacitors in a circuit.

(2)

.....

.....

.....

.....

(ii) The student moved the switch to position A to charge the 680 μF electrolytic capacitor.

She moved the switch to position B to connect the capacitor to another capacitor X.

She measured the potential difference across the 680 μF electrolytic capacitor when the switch was in position A and in position B.

Complete the diagram to show the circuit the student used.

(2)

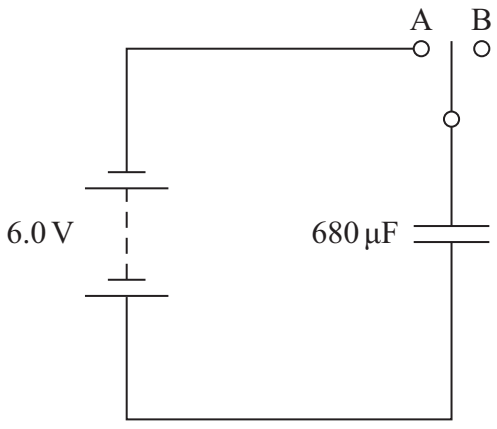

DO NOT WRITE IN THIS AREA
DO NOT WRITE IN THIS AREA
DO NOT WRITE IN THIS AREA

DO NOT WRITE IN THIS AREA
DO NOT WRITE IN THIS AREA
DO NOT WRITE IN THIS AREA

(b) The student charged the 680 μF capacitor to different potential differences, V_1.

For each value of potential difference V_1, she connected the 680 μF capacitor to capacitor X. The final value of the potential difference across the 680 μF capacitor was V_2.

She recorded the corresponding values of V_1 and V_2 and plotted the graph below.

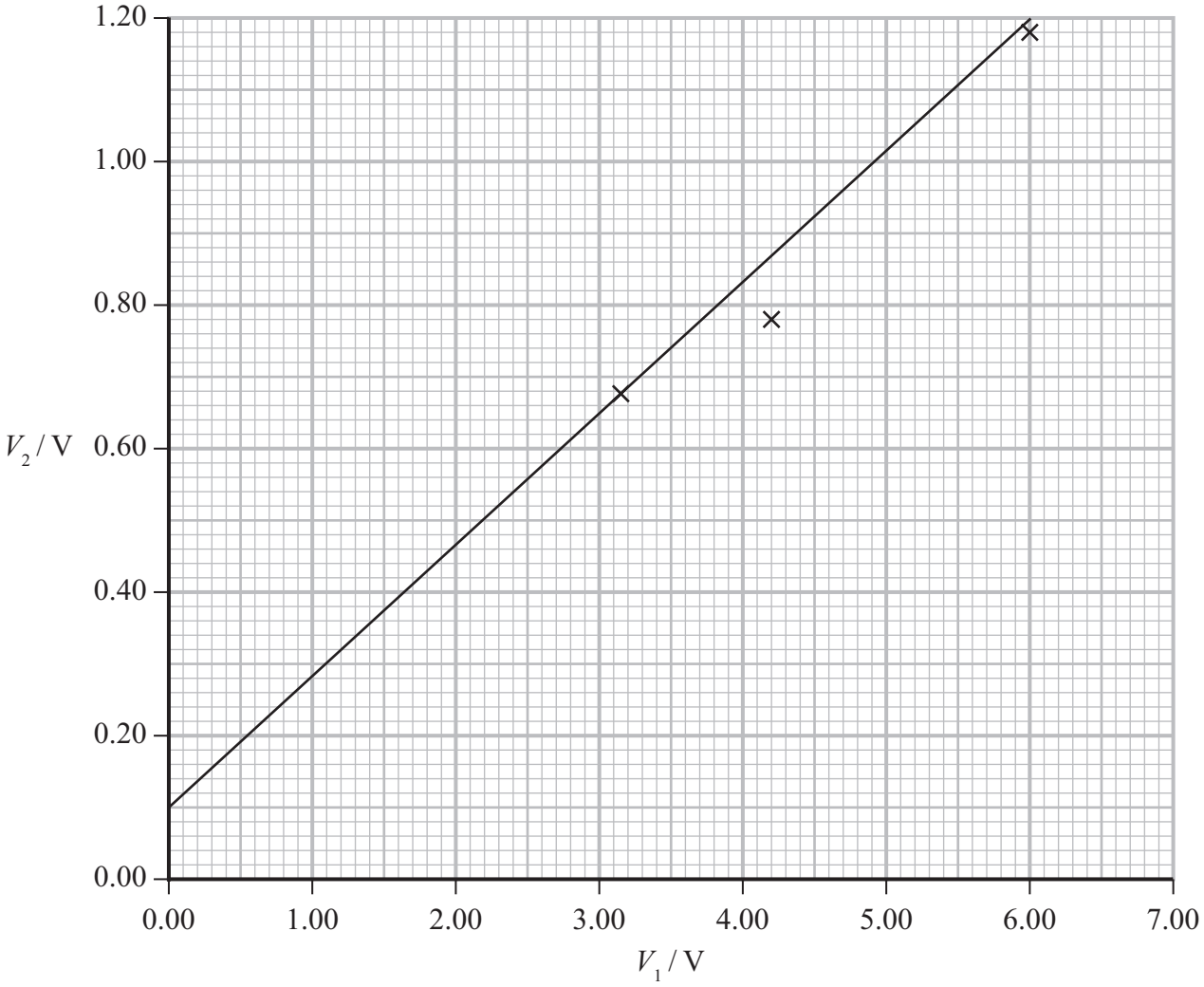

Criticise the student's graph.

(3)

.....

.....

.....

.....

.....

.....

(Total for Question 1 = 7 marks)

2 A student investigated how the pressure of a fixed volume of air varied with temperature using the apparatus shown.

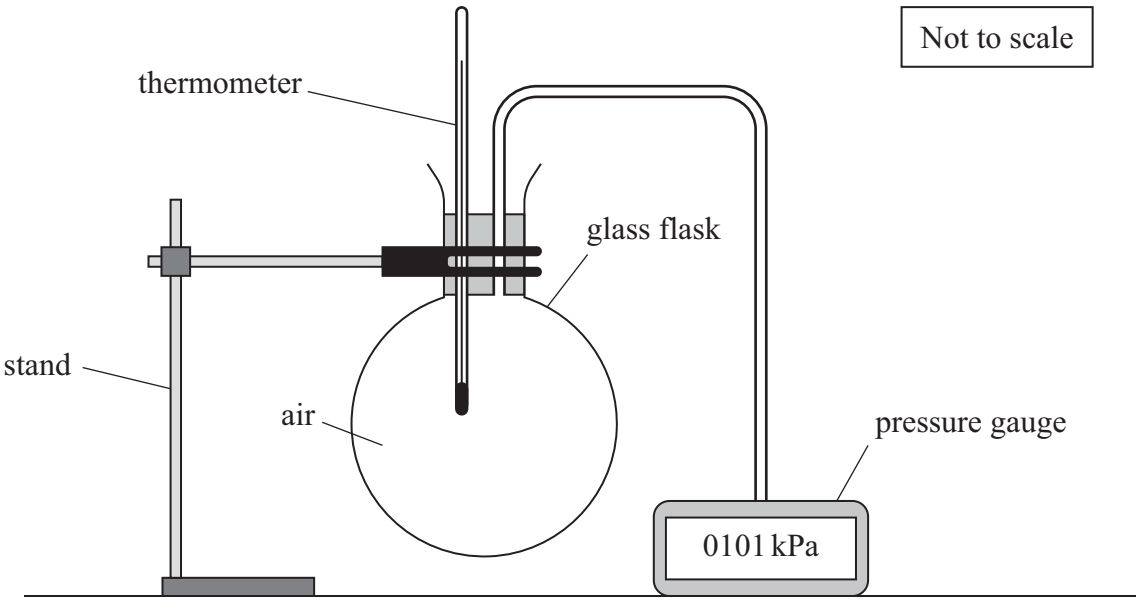

(a) The student used temperatures ranging from 0 °C to 100 °C.

Devise a method the student could use to estimate a value for absolute zero.

Your method should include any additional apparatus and the use of a suitable graph.

(6)

DO NOT WRITE IN THIS AREA
DO NOT WRITE IN THIS AREA
DO NOT WRITE IN THIS AREA

DO NOT WRITE IN THIS AREA
DO NOT WRITE IN THIS AREA
DO NOT WRITE IN THIS AREA

(b) The student suggested that using a data logger with a temperature probe and a pressure sensor would improve the investigation.

Explain how using a data logger could improve the accuracy of the measurements.

(3)

.....

.....

.....

.....

.....

.....

(Total for Question 2 = 9 marks)

BLANK PAGE

DO NOT WRITE IN THIS AREA
DO NOT WRITE IN THIS AREA
DO NOT WRITE IN THIS AREA

DO NOT WRITE IN THIS AREA
DO NOT WRITE IN THIS AREA
DO NOT WRITE IN THIS AREA

3 A student investigated the absorption of light by glass using the apparatus shown.

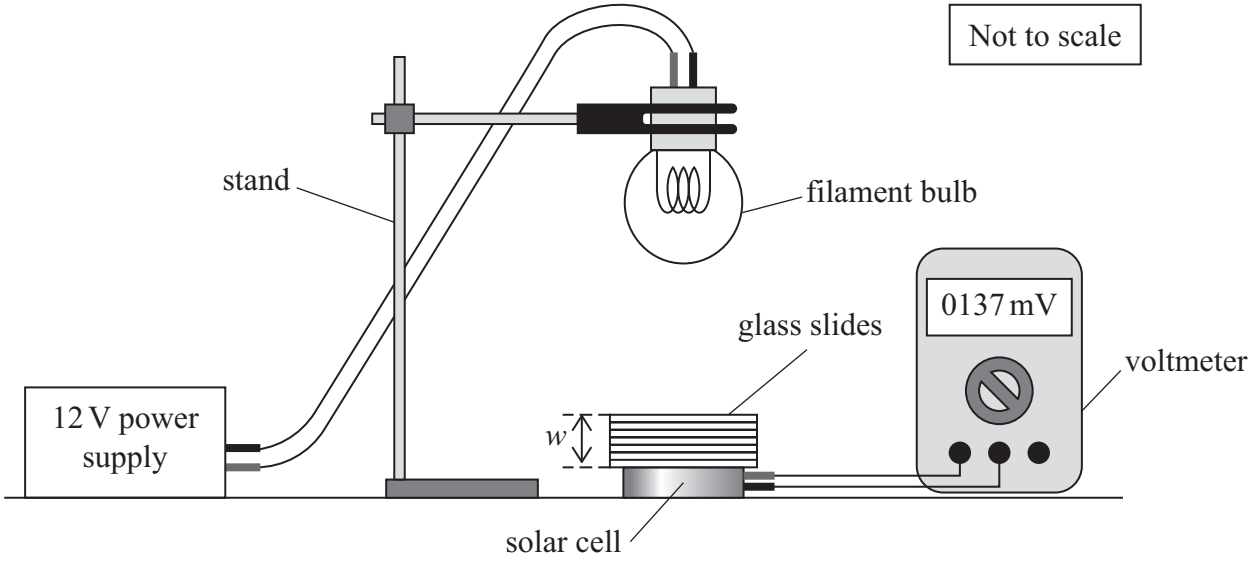

The student varied the thickness w of glass by placing glass slides on the solar cell.

(a) The student used a micrometer screw gauge to measure the thickness of one glass slide. She recorded a single measurement as 1.21 mm.

Explain why a micrometer screw gauge was an appropriate instrument to use for this measurement.

Your answer should include a calculation.

(2)

(b) For each value of w the student recorded the potential difference V across the solar cell.

Explain one variable she should control in this investigation.

(2)

(c) The relationship between V and w is given by

$$V = Ae^{-Bw}$$

where A and B are constants.

(i) Explain how a graph of ln V against w could be used to determine a value for B.

(2)

.....

.....

.....

.....

(ii) The student recorded the following results.

w/mm	V/mV	
1.21	381	
2.46	375	
4.88	366	
6.10	361	
8.55	352	
10.97	344	

Plot a graph of ln V against w on the grid opposite.

Use the additional column to record your processed data. You should keep the values of V in mV.

(5)

(iii) Determine the gradient of the graph.

(3)

.....

.....

.....

.....

Gradient = ...

DO NOT WRITE IN THIS AREA
DO NOT WRITE IN THIS AREA
DO NOT WRITE IN THIS AREA

DO NOT WRITE IN THIS AREA
DO NOT WRITE IN THIS AREA
DO NOT WRITE IN THIS AREA

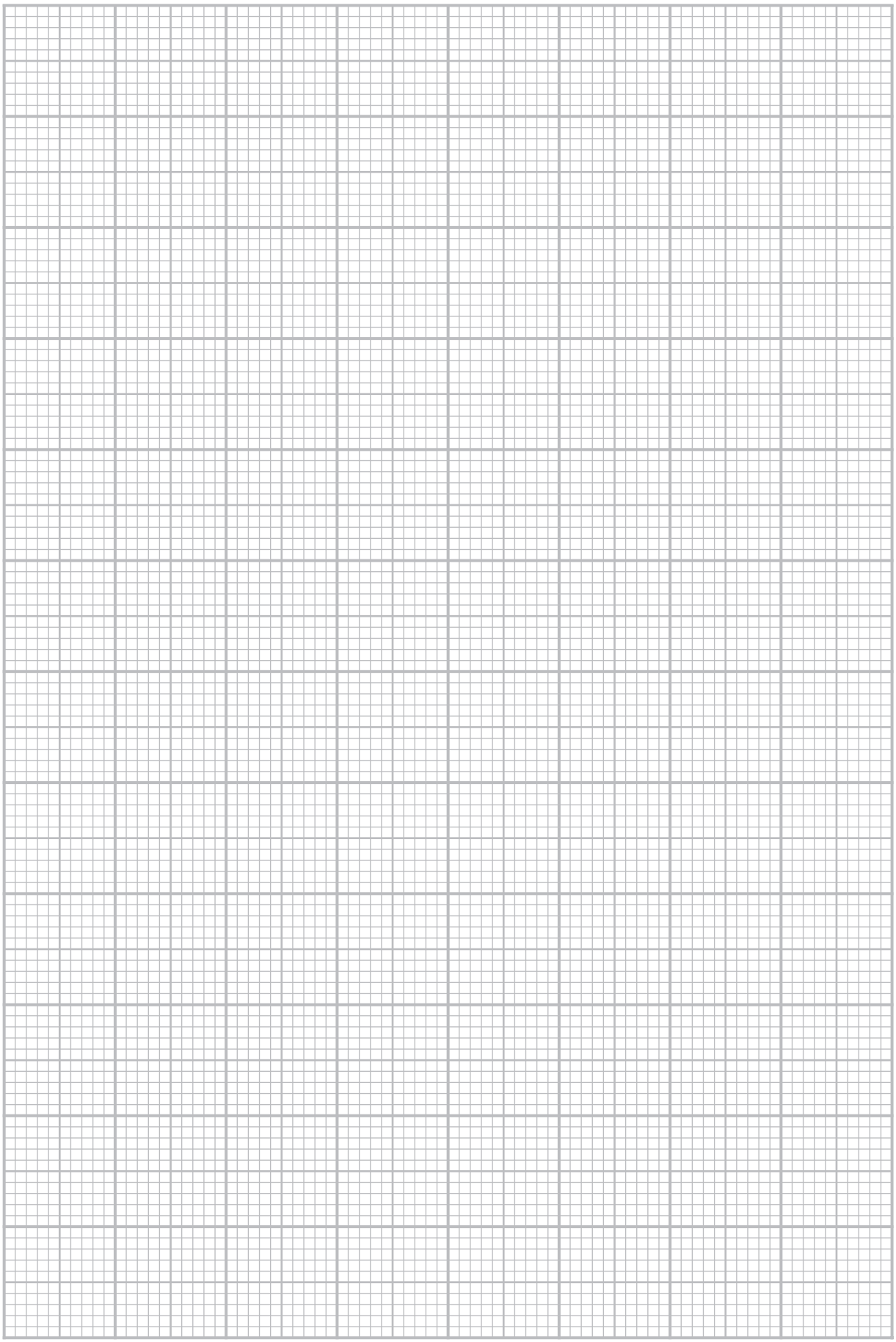

(iv) The mean thickness of each glass slide was 1.22 mm.

Determine the minimum number of glass slides needed to reduce V to 75% of the initial value.

(4)

Minimum number of glass slides = ...

(Total for Question 3 = 18 marks)

DO NOT WRITE IN THIS AREA
DO NOT WRITE IN THIS AREA
DO NOT WRITE IN THIS AREA

DO NOT WRITE IN THIS AREA
DO NOT WRITE IN THIS AREA
DO NOT WRITE IN THIS AREA

4 A student investigated the properties of a spring using the apparatus shown.

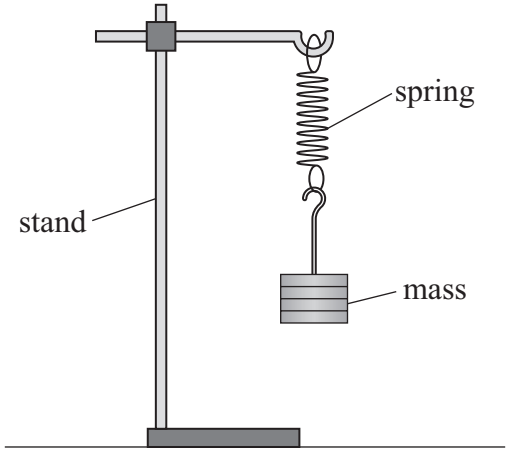

(a) The student determined the time period T of the oscillations of the mass-spring system.

The student displaced the mass downwards. He released the mass so that the mass oscillated vertically. He used a stopwatch to measure the time for multiple oscillations.

(i) Explain why timing multiple oscillations improves the measurement of T.

(3)

(ii) Describe two techniques the student should use when timing oscillations.

(2)

(iii) The student recorded the following results.

10*T*/s	6.88	6.93	6.84	6.96

Calculate the mean value of *T*.

(2)

Mean value of *T* = ...

(iv) Determine the percentage uncertainty in the mean value of *T*.

(2)

Percentage uncertainty = ...

(b) The Poisson Ratio is a property of the material the spring is made from.

For oscillations on a spring, the Poisson Ratio *v* can be calculated using

$$v = N^2 \frac{D^2}{2d^2} - 1$$

where *N* is a constant related to the time period of oscillations
D is the diameter of the mass
d is the internal diameter of the coiled part of the spring.

(i) The student used vernier calipers to measure *d*.

Explain one technique he should use to determine an accurate value for *d*.

(2)

DO NOT WRITE IN THIS AREA
DO NOT WRITE IN THIS AREA
DO NOT WRITE IN THIS AREA

DO NOT WRITE IN THIS AREA
DO NOT WRITE IN THIS AREA
DO NOT WRITE IN THIS AREA

(ii) Show that the percentage uncertainty in the term $\frac{D^2}{2d^2}$ is about 2%.

$D = 59.4\,\text{mm} \pm 0.2\,\text{mm}$
$d = 13.9\,\text{mm} \pm 0.1\,\text{mm}$

(3)

(iii) The student determined the value of the constant N experimentally and estimated its percentage uncertainty.

He determined the value of v as 0.276 with a percentage uncertainty of 6%.

The value of v for steel is 0.265

Deduce whether this spring was made from steel.

(2)

(Total for Question 4 = 16 marks)

TOTAL FOR PAPER = 50 MARKS

List of data, formulae and relationships

Acceleration of free fall	$g = 9.81 \text{ m s}^{-2}$	(close to Earth's surface)
Boltzmann constant	$k = 1.38 \times 10^{-23} \text{ J K}^{-1}$	
Coulomb's law constant	$k = 1/4\pi\varepsilon_0$	
	$= 8.99 \times 10^{9} \text{ N m}^2 \text{ C}^{-2}$	
Electron charge	$e = -1.60 \times 10^{-19} \text{ C}$	
Electron mass	$m_e = 9.11 \times 10^{-31} \text{ kg}$	
Electronvolt	$1 \text{ eV} = 1.60 \times 10^{-19} \text{ J}$	
Gravitational constant	$G = 6.67 \times 10^{-11} \text{ N m}^2 \text{ kg}^{-2}$	
Gravitational field strength	$g = 9.81 \text{ N kg}^{-1}$	(close to Earth's surface)
Permittivity of free space	$\varepsilon_0 = 8.85 \times 10^{-12} \text{ F m}^{-1}$	
Planck constant	$h = 6.63 \times 10^{-34} \text{ J s}$	
Proton mass	$m_p = 1.67 \times 10^{-27} \text{ kg}$	
Speed of light in a vacuum	$c = 3.00 \times 10^{8} \text{ m s}^{-1}$	
Stefan-Boltzmann constant	$\sigma = 5.67 \times 10^{-8} \text{ W m}^{-2} \text{ K}^{-4}$	
Unified atomic mass unit	$u = 1.66 \times 10^{-27} \text{ kg}$	

Unit 1

Mechanics

Kinematic equations of motion

$$s = \frac{(u + v)t}{2}$$

$$v = u + at$$

$$s = ut + \frac{1}{2}at^2$$

$$v^2 = u^2 + 2as$$

Forces

$$\Sigma F = ma$$

$$g = \frac{F}{m}$$

$$W = mg$$

Momentum

$$p = mv$$

Moment of force

$$\text{moment} = Fx$$

Work and energy

$$\Delta W = F\Delta s$$

$$E_k = \frac{1}{2}mv^2$$

$$\Delta E_{grav} = mg\Delta h$$

Power

$$P = \frac{E}{t}$$

$$P = \frac{W}{t}$$

DO NOT WRITE IN THIS AREA
DO NOT WRITE IN THIS AREA
DO NOT WRITE IN THIS AREA

DO NOT WRITE IN THIS AREA
DO NOT WRITE IN THIS AREA
DO NOT WRITE IN THIS AREA

Efficiency

$$\text{efficiency} = \frac{\text{useful energy output}}{\text{total energy input}}$$

$$\text{efficiency} = \frac{\text{useful power output}}{\text{total power input}}$$

Materials

Density $\rho = \frac{m}{V}$

Stokes' law $F = 6\pi\eta r v$

Hooke's law $\Delta F = k\Delta x$

Elastic strain energy $\Delta E_{el} = \frac{1}{2} F \Delta x$

Young modulus $E = \frac{\sigma}{\varepsilon}$ where

Stress $\sigma = \frac{F}{A}$

Strain $\varepsilon = \frac{\Delta x}{x}$

Unit 2

Waves

Wave speed	$v = f\lambda$
Speed of a transverse wave on a string	$v = \sqrt{\frac{T}{\mu}}$
Intensity of radiation	$I = \frac{P}{A}$
Refractive index	$n_1 \sin\theta_1 = n_2 \sin\theta_2$
	$n = \frac{c}{v}$
Critical angle	$\sin C = \frac{1}{n}$
Diffraction grating	$n\lambda = d\sin\theta$

Electricity

Potential difference	$V = \frac{W}{Q}$
Resistance	$R = \frac{V}{I}$
Electrical power, energy	$P = VI$
	$P = I^2R$
	$P = \frac{V^2}{R}$
	$W = VIt$
Resistivity	$R = \frac{\rho l}{A}$
Current	$I = \frac{\Delta Q}{\Delta t}$
	$I = nqvA$
Resistors in series	$R = R_1 + R_2 + R_3$
Resistors in parallel	$\frac{1}{R} = \frac{1}{R_1} + \frac{1}{R_2} + \frac{1}{R_3}$

Particle nature of light

Photon model	$E = hf$
Einstein's photoelectric equation	$hf = \phi + \frac{1}{2}mv^2_{\max}$
de Broglie wavelength	$\lambda = \frac{h}{p}$

DO NOT WRITE IN THIS AREA
DO NOT WRITE IN THIS AREA
DO NOT WRITE IN THIS AREA

DO NOT WRITE IN THIS AREA
DO NOT WRITE IN THIS AREA
DO NOT WRITE IN THIS AREA

Unit 4

Further mechanics

Impulse	$F\Delta t = \Delta p$
Kinetic energy of a non-relativistic particle	$E_k = \frac{p^2}{2m}$
Motion in a circle	$v = \omega r$
	$T = \frac{2\pi}{\omega}$
	$a = \frac{v^2}{r}$
	$a = r\omega^2$
Centripetal force	$F = ma = \frac{mv^2}{r}$
	$F = mr\omega^2$

Electric and magnetic fields

Electric field	$E = \frac{F}{Q}$
Coulomb's law	$F = \frac{Q_1 Q_2}{4\pi\varepsilon_0 r^2}$
	$E = \frac{Q}{4\pi\varepsilon_0 r^2}$
	$E = \frac{V}{d}$
Electrical potential	$V = \frac{Q}{4\pi\varepsilon_0 r}$
Capacitance	$C = \frac{Q}{V}$
Energy stored in capacitor	$W = \frac{1}{2}QV$
	$W = \frac{1}{2}CV^2$
	$W = \frac{1}{2}\frac{Q^2}{C}$
Capacitor discharge	$Q = Q_0 e^{-t/RC}$

Resistor-capacitor discharge $I = I_0 e^{-t/RC}$

$V = V_0 e^{-t/RC}$

$\ln Q = \ln Q_0 - \frac{t}{RC}$

$\ln I = \ln I_0 - \frac{t}{RC}$

$\ln V = \ln V_0 - \frac{t}{RC}$

In a magnetic field $F = Bqv \sin \theta$

$F = BIl \sin \theta$

Faraday's and Lenz's laws $\mathscr{E} = \frac{-\mathrm{d}(N\phi)}{\mathrm{d}t}$

Nuclear and particle physics

In a magnetic field $r = \frac{p}{BQ}$

Mass-energy $\Delta E = c^2 \Delta m$

DO NOT WRITE IN THIS AREA
DO NOT WRITE IN THIS AREA
DO NOT WRITE IN THIS AREA

DO NOT WRITE IN THIS AREA
DO NOT WRITE IN THIS AREA
DO NOT WRITE IN THIS AREA

Unit 5

Thermodynamics

Heating

$$\Delta E = mc\Delta\theta$$

$$\Delta E = L\Delta m$$

Ideal gas equation

$$pV = NkT$$

Molecular kinetic theory

$$\tfrac{1}{2}m\langle c^2\rangle = \tfrac{3}{2}kT$$

Nuclear decay

Mass-energy

$$\Delta E = c^2\Delta m$$

Radioactive decay

$$A = \lambda N$$

$$\frac{\mathrm{d}N}{\mathrm{d}t} = -\lambda N$$

$$\lambda = \frac{\ln 2}{t_{1/2}}$$

$$N = N_0 \mathrm{e}^{-\lambda t}$$

$$A = A_0 \mathrm{e}^{-\lambda t}$$

Oscillations

Simple harmonic motion

$$F = -kx$$

$$a = -\omega^2 x$$

$$x = A\cos\omega t$$

$$v = -A\omega\sin\omega t$$

$$a = -A\omega^2\cos\omega t$$

$$T = \frac{1}{f} = \frac{2\pi}{\omega}$$

$$\omega = 2\pi f$$

Simple harmonic oscillator

$$T = 2\pi\sqrt{\frac{m}{k}}$$

$$T = 2\pi\sqrt{\frac{l}{g}}$$

Astrophysics and cosmology

Gravitational field strength	$g = \frac{F}{m}$
Gravitational force	$F = \frac{Gm_1m_2}{r^2}$
Gravitational field	$g = \frac{Gm}{r^2}$
Gravitational potential	$V_{grav} = \frac{-Gm}{r}$
Stefan-Boltzmann law	$L = \sigma AT^4$
Wien's law	$\lambda_{max}T = 2.898 \times 10^{-3}\,\text{m K}$
Intensity of radiation	$I = \frac{L}{4\pi d^2}$
Redshift of electromagnetic radiation	$z = \frac{\Delta\lambda}{\lambda} \approx \frac{\Delta f}{f} \approx \frac{v}{c}$
Cosmological expansion	$v = H_0 d$

DO NOT WRITE IN THIS AREA
DO NOT WRITE IN THIS AREA
DO NOT WRITE IN THIS AREA