Please check the examination details below before entering your candidate information

Candidate surname	Other names

Pearson Edexcel International GCSE

Centre Number | Candidate Number

Thursday 7 January 2021

Morning (Time: 2 hours) | Paper Reference **4MA1/1H**

Mathematics A

Paper 1H
Higher Tier



You must have:
Ruler graduated in centimetres and millimetres, protractor, compasses, pen, HB pencil, eraser, calculator. Tracing paper may be used.

Total Marks

Instructions

- Use **black** ink or ball-point pen.
- **Fill in the boxes** at the top of this page with your name, centre number and candidate number.
- Answer **all** questions.
- Without sufficient working, correct answers may be awarded no marks.
- Answer the questions in the spaces provided
  – *there may be more space than you need.*
- **Calculators may be used.**
- You must **NOT** write anything on the formulae page.
  Anything you write on the formulae page will gain NO credit.

Information

- The total mark for this paper is 100.
- The marks for **each** question are shown in brackets
  – *use this as a guide as to how much time to spend on each question.*

Advice

- Read each question carefully before you start to answer it.
- Check your answers if you have time at the end.

Turn over ▶

P66297A

©2021 Pearson Education Ltd.

1/1/1/

P 6 6 2 9 7 A 0 1 2 8

Pearson

International GCSE Mathematics

Formulae sheet – Higher Tier

Arithmetic series

Sum to n terms, $S_n = \frac{n}{2}[2a + (n-1)d]$

The quadratic equation

The solutions of $ax^2 + bx + c = 0$ where $a \neq 0$ are given by:

$$x = \frac{-b \pm \sqrt{b^2 - 4ac}}{2a}$$

Area of trapezium $= \frac{1}{2}(a+b)h$

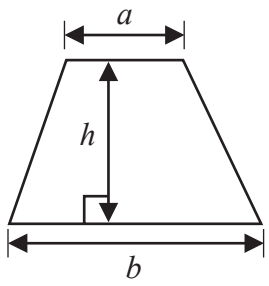

Trigonometry

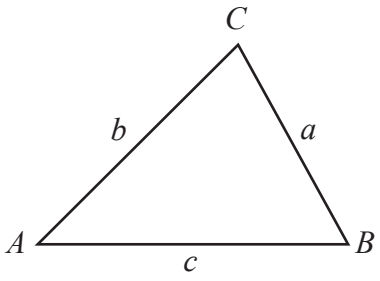

In any triangle *ABC*

Sine Rule $\frac{a}{\sin A} = \frac{b}{\sin B} = \frac{c}{\sin C}$

Cosine Rule $a^2 = b^2 + c^2 - 2bc\cos A$

Area of triangle $= \frac{1}{2}ab\sin C$

Volume of cone $= \frac{1}{3}\pi r^2 h$

Curved surface area of cone $= \pi rl$

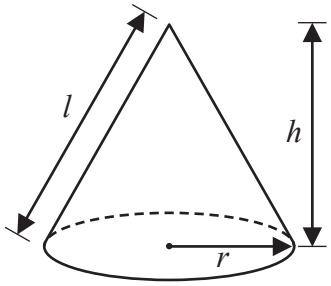

Volume of prism
= area of cross section × length

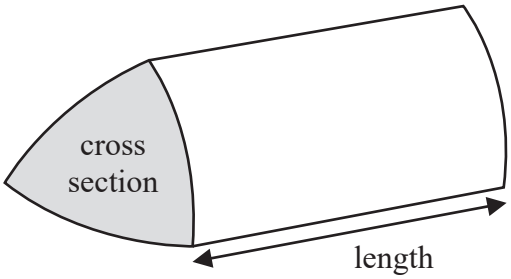

Volume of cylinder $= \pi r^2 h$
Curved surface area of cylinder $= 2\pi rh$

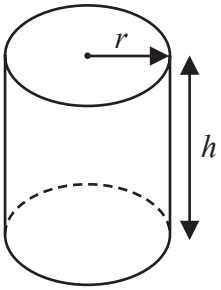

Volume of sphere $= \frac{4}{3}\pi r^3$

Surface area of sphere $= 4\pi r^2$

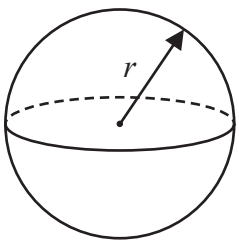

DO NOT WRITE IN THIS AREA
DO NOT WRITE IN THIS AREA
DO NOT WRITE IN THIS AREA

DO NOT WRITE IN THIS AREA
DO NOT WRITE IN THIS AREA
DO NOT WRITE IN THIS AREA

Answer ALL TWENTY FOUR questions.

Write your answers in the spaces provided.

You must write down all the stages in your working.

1 Pieter owns a currency conversion shop.

Last Monday, Pieter changed a total of 20 160 rand into a number of different currencies.

He changed $\frac{3}{10}$ of the 20 160 rand into euros.

He changed the rest of the rands into dollars, rupees and francs in the ratios 9 : 5 : 2

Pieter changed more rands into dollars than he changed into francs.

Work out how many more.

..... rand

(Total for Question 1 is 4 marks)

2 The table gives information about the speeds, in kilometres per hour, of 80 motorbikes as each pass under a bridge.

Speed (s kilometres per hour)	**Frequency**
$40 < s \leqslant 50$	10
$50 < s \leqslant 60$	16
$60 < s \leqslant 70$	19
$70 < s \leqslant 80$	23
$80 < s \leqslant 90$	12

(a) Write down the modal class.

.....

(1)

(b) Work out an estimate for the mean speed of the motorbikes as they pass under the bridge. Give your answer correct to 3 significant figures.

..... kilometres per hour

(4)

(Total for Question 2 is 5 marks)

DO NOT WRITE IN THIS AREA
DO NOT WRITE IN THIS AREA
DO NOT WRITE IN THIS AREA

DO NOT WRITE IN THIS AREA
DO NOT WRITE IN THIS AREA
DO NOT WRITE IN THIS AREA

3 The diagram shows a container for water in the shape of a prism.

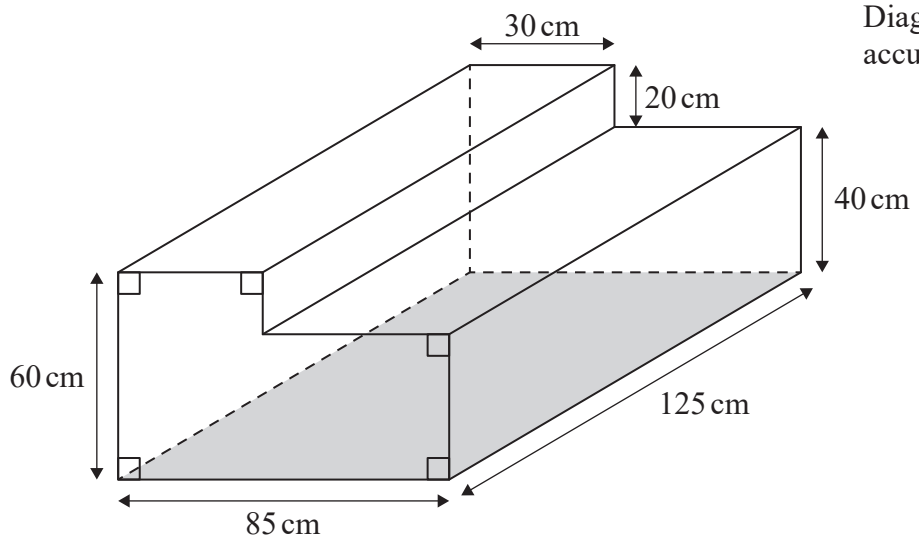

Diagram **NOT** accurately drawn

The rectangular base of the prism, shown shaded in the diagram, is horizontal.
The container is completely full of water.

Tuah is going to use a pump to empty the water from the container so that the volume of water in the container decreases at a constant rate.

The pump starts to empty water from the container at 10 30 and at 12 00 the water level in the container has dropped by 20 cm.

Find the time at which all the water has been pumped out of the container.

.....

(Total for Question 3 is 4 marks)

4 $\mathscr{E}$ = {20, 21, 22, 23, 24, 25, 26, 27, 28, 29}

A = {odd numbers}
B = {multiples of 3}

List the members of the set

(i) $A \cap B$

.....

(1)

(ii) $A \cup B$

.....

(1)

(Total for Question 4 is 2 marks)

DO NOT WRITE IN THIS AREA
DO NOT WRITE IN THIS AREA
DO NOT WRITE IN THIS AREA

DO NOT WRITE IN THIS AREA
DO NOT WRITE IN THIS AREA
DO NOT WRITE IN THIS AREA

5 (a) Factorise fully $15y^4 + 20uy^3$

.....

(2)

(b) Solve $4 - 3x = \dfrac{5 - 8x}{4}$

Show clear algebraic working.

$x =$ .....

(3)

(Total for Question 5 is 5 marks)

6 (a) Write 2 840 000 000 in standard form.

.....

(1)

(b) Write 2.5×10^{-4} as an ordinary number.

.....

(1)

(Total for Question 6 is 2 marks)

7 Chen invests 40 000 yuan in a fixed-term bond for 3 years.

The fixed-term bond pays compound interest at a rate of 3.5% each year.

(a) Work out the value of Chen's investment at the end of 3 years.
Give your answer to the nearest yuan.

..... yuan

(3)

Wang invested P yuan.
The value of his investment decreased by 6.5% each year.

At the end of the first year, the value of Wang's investment was 30 481 yuan.

(b) Work out the value of P.

$P =$ .....

(3)

(Total for Question 7 is 6 marks)

DO NOT WRITE IN THIS AREA
DO NOT WRITE IN THIS AREA
DO NOT WRITE IN THIS AREA

DO NOT WRITE IN THIS AREA
DO NOT WRITE IN THIS AREA
DO NOT WRITE IN THIS AREA

8 The region, shown shaded in the diagram, is a path.

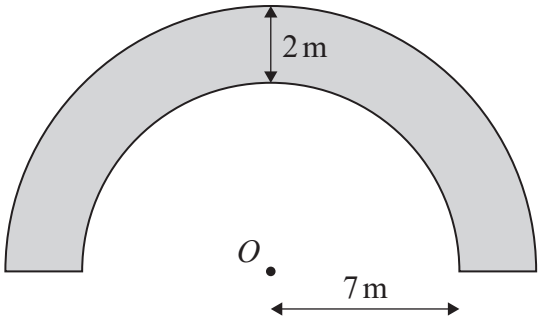

Diagram **NOT** accurately drawn

The boundary of the path is formed by two semicircles, with the same centre O, and two straight lines.

The inner semicircle has a radius of 7 metres.
The path has a width of 2 metres.

Work out the perimeter of the path.
Give your answer correct to one decimal place.

..... m

(Total for Question 8 is 3 marks)

9 (a) Simplify $(2x^3y^5)^4$

.....

(2)

(b) (i) Factorise $x^2 + 5x - 36$

.....

(2)

(ii) Hence, solve $x^2 + 5x - 36 = 0$

.....

(1)

(Total for Question 9 is 5 marks)

DO NOT WRITE IN THIS AREA
DO NOT WRITE IN THIS AREA
DO NOT WRITE IN THIS AREA

DO NOT WRITE IN THIS AREA
DO NOT WRITE IN THIS AREA
DO NOT WRITE IN THIS AREA

10 Here is isosceles triangle *ABC*.

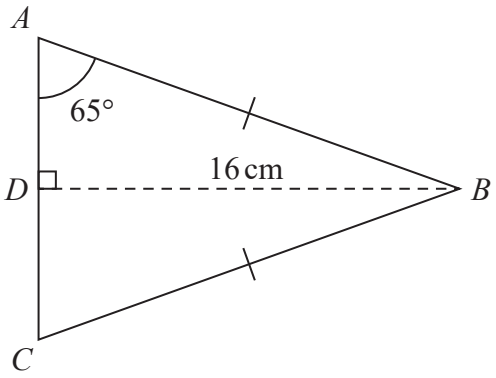

Diagram **NOT** accurately drawn

D is the midpoint of *AC* and *DB* = 16 cm.

Angle *DAB* = 65°

Work out the perimeter of triangle *ABC*.
Give your answer correct to one decimal place.

..... cm

(Total for Question 10 is 4 marks)

11 The cumulative frequency graph gives information about the weights, in grams, of 90 bags of sweets.

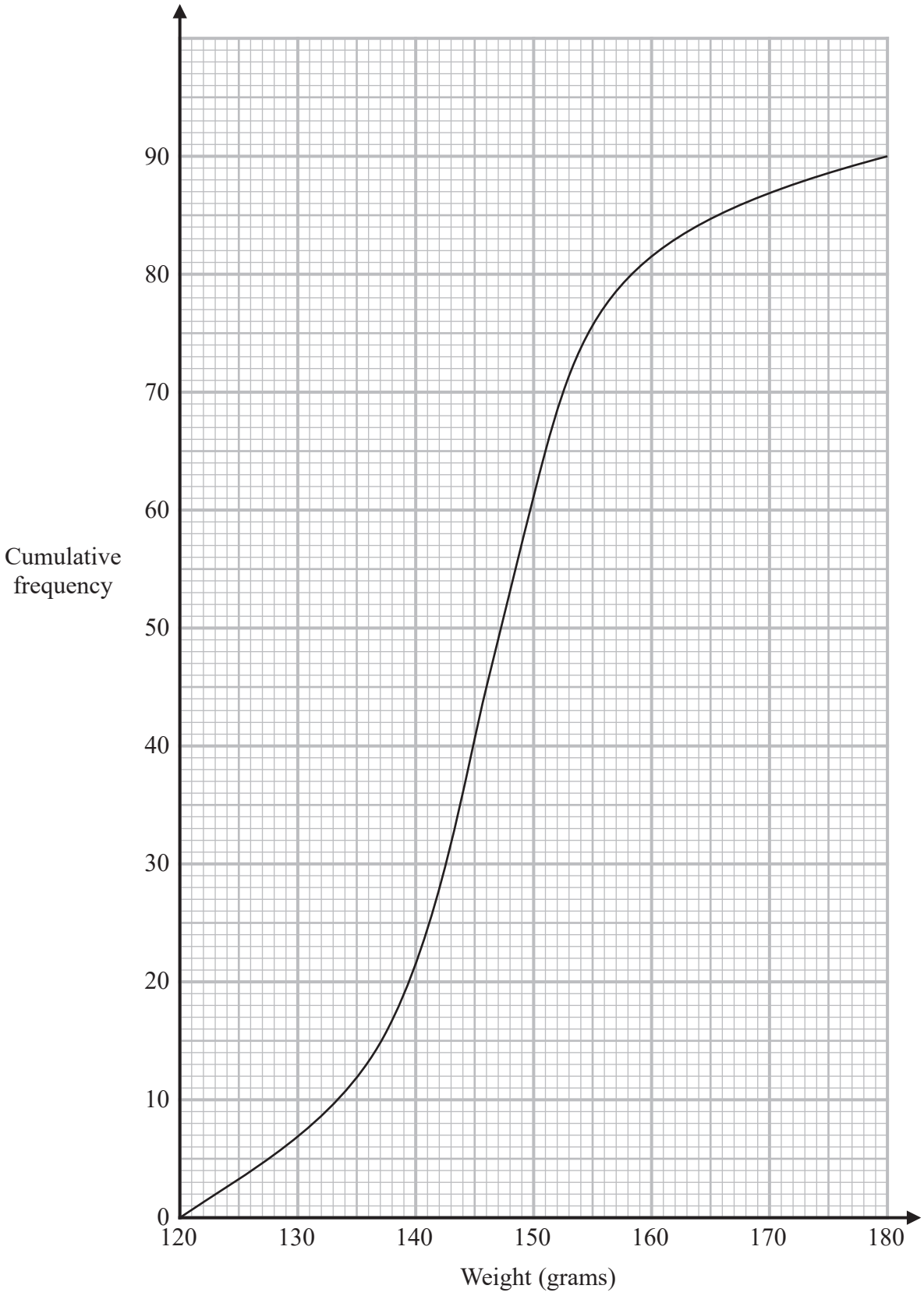

DO NOT WRITE IN THIS AREA
DO NOT WRITE IN THIS AREA
DO NOT WRITE IN THIS AREA

DO NOT WRITE IN THIS AREA
DO NOT WRITE IN THIS AREA
DO NOT WRITE IN THIS AREA

(a) Find an estimate for the median of the weights of these bags of sweets.

..... grams

(2)

Roberto sells the bags of sweets to raise money for charity.
Bags with a weight greater than d grams are labelled large bags and sold for 3.75 euros each bag.

The total amount of money he receives by selling all the large bags is 93.75 euros.

(b) Find the value of d.

$d =$ .....

(3)

(Total for Question 11 is 5 marks)

12 (a) Express $\frac{4}{x-2} - \frac{3}{x+1}$ as a single fraction.

Give your answer in its simplest form.

.....

(3)

(b) Expand and simplify $2x(x - 5)(x - 3)$

.....

(3)

(Total for Question 12 is 6 marks)

DO NOT WRITE IN THIS AREA
DO NOT WRITE IN THIS AREA
DO NOT WRITE IN THIS AREA

DO NOT WRITE IN THIS AREA
DO NOT WRITE IN THIS AREA
DO NOT WRITE IN THIS AREA

13 Point A has coordinates (5, 8)
Point B has coordinates (9, –4)

(a) Work out the gradient of AB.

.....

(2)

The straight line **L** has equation $y = -4x + 5$

(b) Write down the gradient of a straight line that is perpendicular to **L**.

.....

(1)

(Total for Question 13 is 3 marks)

14 Ding is going to play one game of snooker against each of two of his friends, Marco and Judd.

The probability tree diagram gives information about the probabilities that Ding will win or lose each of these two games.

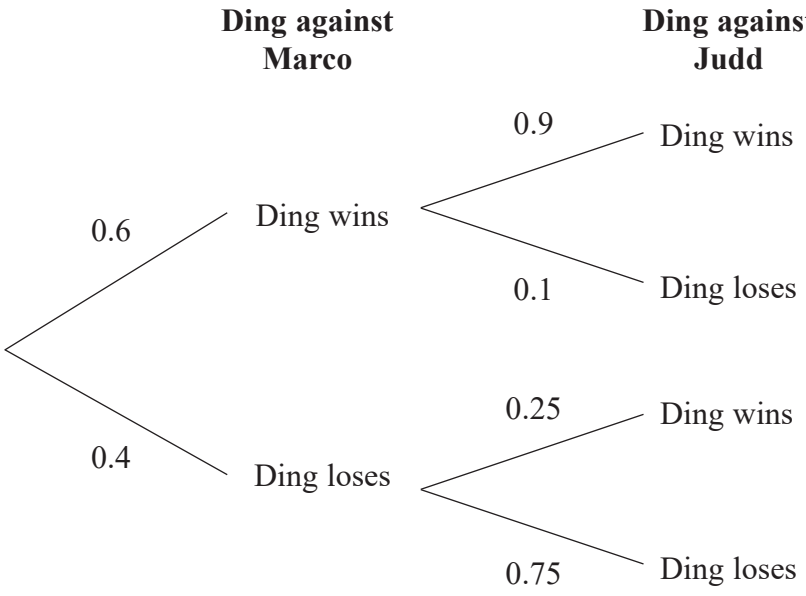

(a) Work out the probability that Ding will win both games.

.....

(2)

(b) Work out the probability that Ding will win exactly one of the games.

.....

(3)

(Total for Question 14 is 5 marks)

DO NOT WRITE IN THIS AREA
DO NOT WRITE IN THIS AREA
DO NOT WRITE IN THIS AREA

15

$$a = \frac{v - u}{t}$$

v = 9.6 correct to 1 decimal place
u = 3.8 correct to 1 decimal place
t = 1.84 correct to 2 decimal places

Calculate the upper bound for the value of a.
Give your answer as a decimal correct to 2 decimal places.
Show your working clearly.

.....

(Total for Question 15 is 3 marks)

DO NOT WRITE IN THIS AREA
DO NOT WRITE IN THIS AREA
DO NOT WRITE IN THIS AREA

16 The diagram shows the positions of three ships, A, B and C.

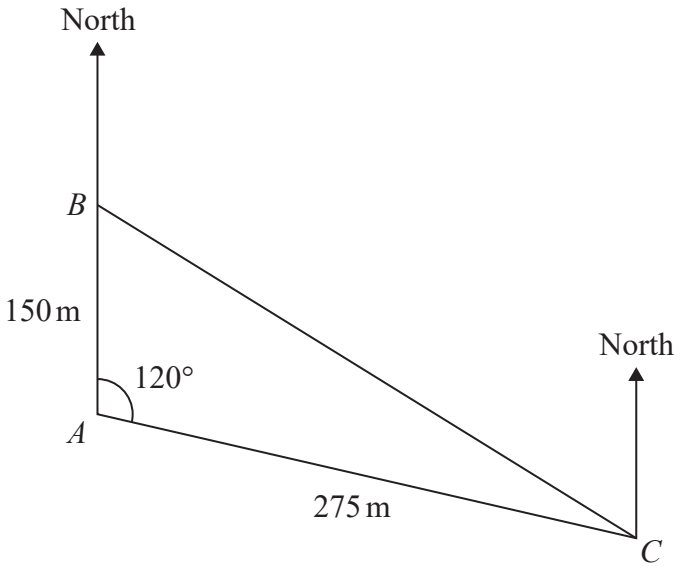

Diagram **NOT** accurately drawn

Ship B is due north of ship A.

The bearing of ship C from ship A is 120°

Calculate the bearing of ship C from ship B.
Give your answer correct to the nearest degree.

DO NOT WRITE IN THIS AREA
DO NOT WRITE IN THIS AREA
DO NOT WRITE IN THIS AREA

DO NOT WRITE IN THIS AREA
DO NOT WRITE IN THIS AREA
DO NOT WRITE IN THIS AREA

°

.....

(Total for Question 16 is 5 marks)

17 A solid, **S**, is made from a hemisphere and a cylinder.

The centre of the circular face of the hemisphere and the centre of the top face of the cylinder are at the same point.

Diagram **NOT** accurately drawn

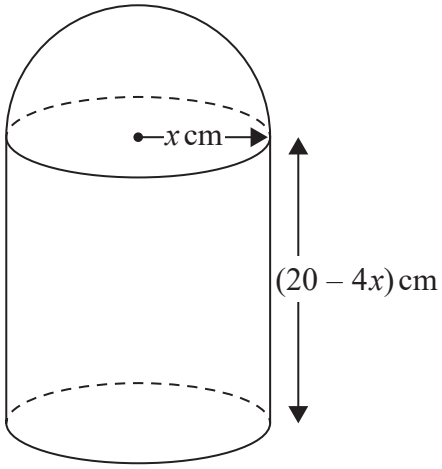

The radius of the cylinder and the radius of the hemisphere are both x cm.
The height of the cylinder is $(20 - 4x)$ cm.

The volume of **S** is V cm^3 where $V = \frac{1}{3}\pi y$

Find the maximum value of y.
Show clear algebraic working.

DO NOT WRITE IN THIS AREA
DO NOT WRITE IN THIS AREA
DO NOT WRITE IN THIS AREA

DO NOT WRITE IN THIS AREA
DO NOT WRITE IN THIS AREA
DO NOT WRITE IN THIS AREA

.....

(Total for Question 17 is 5 marks)

18 Given that $(8 - \sqrt{x})(5 + \sqrt{x}) = y\sqrt{x} + 21$ where x is a prime number and y is an integer,

find the value of x and the value of y.
Show each stage of your working clearly.

$x =$ .....

$y =$ .....

(Total for Question 18 is 3 marks)

19 Solve the simultaneous equations

$$x^2 - 9y - x = 2y^2 - 12$$
$$x + 2y - 1 = 0$$

Show clear algebraic working.

DO NOT WRITE IN THIS AREA
DO NOT WRITE IN THIS AREA
DO NOT WRITE IN THIS AREA

.....

(Total for Question 19 is 5 marks)

DO NOT WRITE IN THIS AREA
DO NOT WRITE IN THIS AREA
DO NOT WRITE IN THIS AREA

20 **A** and **B** are two similar solids.

Diagram **NOT** accurately drawn

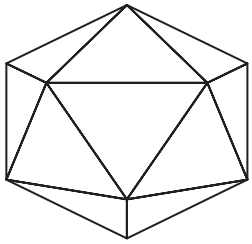

A

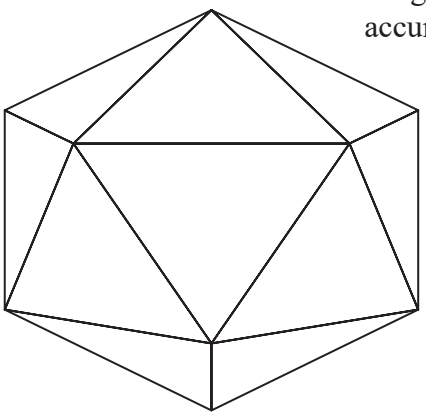

B

A has a volume of 1836 cm^3
B has a volume of 4352 cm^3

B has a total surface area of 1120 cm^2

Work out the total surface area of **A**.

..... cm^2

(Total for Question 20 is 3 marks)

21 A curve has equation $y = f(x)$

The coordinates of the minimum point on this curve are (–9, 15)

(a) Write down the coordinates of the minimum point on the curve with equation

(i) $y = f(x + 3)$

(..... , ...)

(ii) $y = \frac{1}{3} f(x)$

(..... , ...)

(2)

The graph of $y = a\cos(x + b)°$ for $0 \leqslant x \leqslant 360$ is drawn on the grid below.

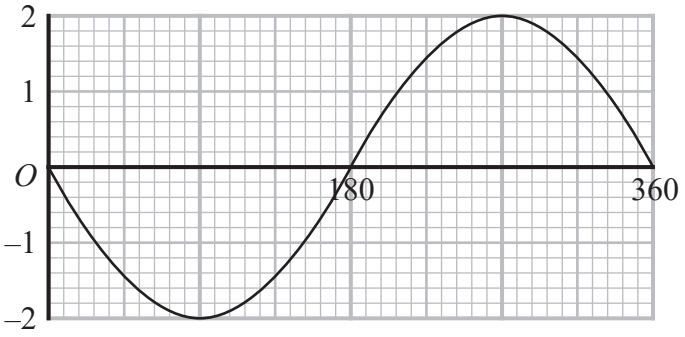

Given that $a > 0$ and that $0 < b < 360$

(b) find the value of a and the value of b.

$a =$ .....

$b =$ .....

(2)

(Total for Question 21 is 4 marks)

DO NOT WRITE IN THIS AREA
DO NOT WRITE IN THIS AREA
DO NOT WRITE IN THIS AREA

DO NOT WRITE IN THIS AREA
DO NOT WRITE IN THIS AREA
DO NOT WRITE IN THIS AREA

22 The function f is such that $f(x) = x^2 - 8x + 5$ where $x \leqslant 4$

Express the inverse function f^{-1} in the form $f^{-1}(x) = ...$

$f^{-1}(x) =$ .....

(Total for Question 22 is 3 marks)

23 OAB is a triangle.

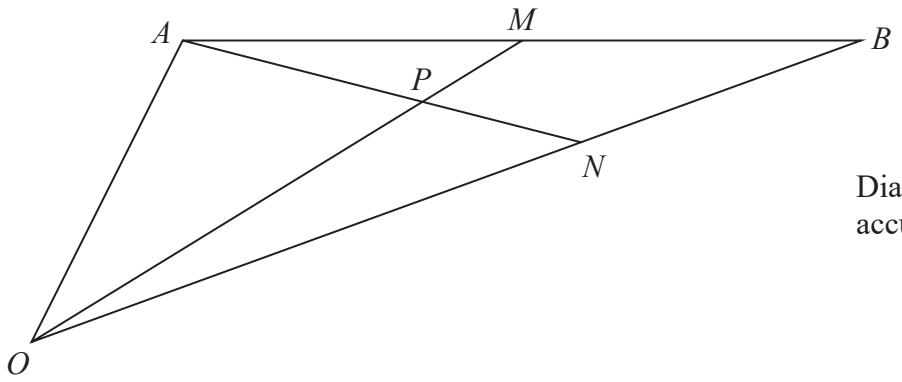

Diagram **NOT** accurately drawn

$\overrightarrow{OA} = 2\mathbf{a}$ and $\overrightarrow{OB} = 2\mathbf{b}$

M is the midpoint of AB.
N is the point on OB such that $ON : NB = 2 : 1$

P is the point on AN such that OPM is a straight line.

Use a vector method to find $OP : PM$
Show your working clearly.

DO NOT WRITE IN THIS AREA
DO NOT WRITE IN THIS AREA
DO NOT WRITE IN THIS AREA

DO NOT WRITE IN THIS AREA
DO NOT WRITE IN THIS AREA
DO NOT WRITE IN THIS AREA

.....

(Total for Question 23 is 6 marks)

Turn over for Question 24

24 An arithmetic series has first term a and common difference d.

The sum of the first $2n$ terms of the series is four times the sum of the first n terms of the series.

Find an expression for a in terms of d.
Show your working clearly.

$a =$ .....

(Total for Question 24 is 4 marks)

TOTAL FOR PAPER IS 100 MARKS

DO NOT WRITE IN THIS AREA
DO NOT WRITE IN THIS AREA
DO NOT WRITE IN THIS AREA